TENANT IMPROVEMENTS
SAN JOAQUIN VALLEY PULMONARY

ABBREVIATIONS

AB	- ANCHOR BOLT
ABV	- ABOVE
AC	- ASPHALT CONCRETE
A/C	- AIR CONDITIONING
ACOUS	- ACOUSTICAL
ACT	- ACOUSTICAL CEILING TILE
ADD	- ADDITION / ADDENDUM
ADD'L	- ADDITIONAL
ADJ	- ADJUSTABLE/ADJACENT
AFF	- ABOVE FINISH FLOOR
AFG	- ABOVE FINISH GRADE
AGG	- AGGREGATE
ALT	- ALTERNATE
ALUM	- ALUMINUM
ANOD	- ANODIZED
APPROX	- APPROXIMATE
ARCH	- ARCHITECT (URAL)
ASPH	- ASPHALT
BB	- BOTTOM OF BEAM
BD	- BOARD
BEL	- BELOW
BLDG	- BUILDING
BLK	- BLOCK
BLKG	- BLOCKING
BM	- BEAM
BO	- BOTTOM OF
BOT	- BOTTOM
BRG	- BEARING
BRZ	- BRONZE
BUR	- BUILT UP ROOFING
CAB	- CABINET
CB	- CATCH BASIN
CD	- CONSTRUCTION DOCUMENTS
CEM	- CEMENT
CER	- CERAMIC
CF	- CUBIC FOOT
CFL	- COUNTERFLASHING
CHAM	- CHAMFER
CHBD	- CHALKBOARD
CI	- CAST IRON
CJ	- CONTROL JOINT
CJT	- CEILING JOIST
CLG	- CEILING
CLKG	- CAULKING
CLR	- CLEAR
CMU	- CONCRETE MASONRY UNIT
CNTR	- COUNTER
CO	- CLEAN OUT
COL	- COLUMN
COMB	- COMBINATION
COMPO	- COMPOSITION (COMPOSITE)
CONC	- CONCRETE
CONT	- CONTINUOUS OR CONTINUE
CONTR	- CONTRACTOR
CONST	- CONSTRUCTION
CORR	- CORRUGATED
COTF	- CLEAN OUT THRU FLOOR
COTG	- CLEAN OUT TO GRADE
COTW	- CLEAN OUT THRU WALL
CPT	- CARPET
CR	- CURB RETURN
CSK	- COUNTERSINK
CSMT	- CASEMENT
CT	- CERAMIC TILE
CTSK	- COUNTERSUNK SCREW
CTR	- CENTER
CW	- COLD WATER
DBL	- DOUBLE
DEMO	- DEMOLITION
DET	- DETAIL
DF	- DRINKING FOUNTAIN
DIA	- DIAMETER
DIAG	- DIAGONAL
DIM	- DIMENSION
DIV	- DIVISION
DN	- DOWN
DPRS	- DEPRESSED
DR	- DOOR
DS	- DOWNSPOUT
DSPR	- DISPENSER
DWG	- DRAWING
DWR	- DRAWER
(E)	- EXISTING
EA	- EACH
EDF	- ELECTRIC DRINKING FOUNTAIN
EJ	- EXPANSION JOINT
ELEV	- ELEVATION
ELEC	- ELECTRIC
ELECT	- ELECTRICAL
EMER	- EMERGENCY
ENAM	- ENAMEL
ENCL	- ENCLOSE (URE)
EQ	- EQUAL
EQUIP	- EQUIPMENT
EXH	- EXHAUST
EXP	- EXPOSED
EXIST	- EXISTING
EXT	- EXTERIOR
FAB	- FABRICATION
FAC	- FACTORY
FAS	- FASTEN, FASTENER
FBD	- FIBERBOARD
FBGL	- FIBERGLASS
FBLK	- FIRE BLOCKING
FBO	- FURNISHED BY OTHERS
FD	- FLOOR DRAIN
FF	- FINISHED FLOOR
FG	- FIXED GLASS
FHMS	- FLATHEAD MACHINE SCREW
FHWS	- FLATHEAD WOOD SCREW
FIN	- FINISH (ED)
FJ	- FLOOR JOIST
FL	- FLOOR
FLG	- FLOORING
FLUOR	- FLUORESCENT
FLX	- FLEXIBLE
FND	- FOUNDATION
FO	- FACE OF
FOC	- FACE OF CONCRETE
FOF	- FACE OF FINISH
FOM	- FACE OF MASONRY
FOS	- FACE OF STUDS
FR	- FRAME (D), (ING)
FRP	- FIBER REINFORCED PANEL
FV	- FIELD VERIFY
GA	- GAGE, GAUGE
GB	- GYPSUM BOARD
GD	- GRADE, GRADING
GI	- GALVANIZED IRON
GKT	- GASKET (ED)
GL	- GLASS, GLAZING
GLB	- GLUE LAMINATED BEAM
GALV	- GALVANZED
GVL	- GRAVEL
GYP	- GYPSUM
HB	- HOSE BIBB
HC	- HOLLOW CORE
HDB	- HARDBOARD
HDR	- HEADER
HDW	- HARDWOOD
HEX	- HEXAGONAL
HM	- HOLLOW METAL, STEEL
HOR	- HORIZONTAL
HT	- HEIGHT
HTG	- HEATING
HVAC	- HEATING/VENTLATING/ AIR CONDITIONING
HW	- HOT WATER
ID	- INSIDE DIAMETER
INCL	- INCLUDE (D), (ING)
INSTR	- INSTRUCTION (S)
INSUL	- INSULATE (D), (ION)
INT	- INTERIOR
INV	- INVERT
JST	- JOIST
JT	- JOINT
KO	- KNOCKOUT
KS	- KNEE SPACE
LAD	- LADDER
LAM	- LAMINATE (D)
LAV	- LAVATORY
LB	- LAG BOLT
LH	- LEFT HAND
LVR	- LOUVER
MAS	- MASONRY
MATL	- MATERIAL
MAX	- MAXIMUM
MB	- MACHINE BOLT
MC	- MEDICINE CABINET
MECH	- MECHANIC (AL)
MED	- MEDIUM
MFG	- MANUFACTURING
MFR	- MANUFACTURE (R)
MIN	- MINIMUM
MIR	- MIRROR
MISC	- MISCELLANEOUS
MKBD	- MARKER BOARD
MLD	- MOLDING, MOULDING
MMB	- MEMBRANE
MO	- MASONRY OPENING
MOD	- MODULAR
MP	- METAL PANEL
MT	- METAL THRESHOLD
MNT	- MOUNT (ED), (ING)
MTL	- METAL
MUL	- MULLION
(N)	- NEW
NAT	- NATURAL
NC	- NOT IN CONTRACT
NO	- NUMBER
NOM	- NOMINAL
NTS	- NOT TO SCALE
O/	- OVER
OA	- OVERALL
OBS	- OBSCURE
OC	- ON CENTER (S)
OCC	- OCCUPANCY
OD	- OUTSIDE DIAMETER
OFD	- OVERFLOW DRAIN
OH	- OVERHEAD
OPQ	- OPAQUE
OPNG	- OPENING
OPPO	- OPPOSITE
OPT	- OPTIONAL
PBD	- PARTICLE BOARD
PC	- PRECAST CONCRETE
PERIM	- PERIMETER
PERF	- PERFORATE (D)
PREFAB	- PREFABRICATE (D)
PH	- PHASE
PL	- PROPERTY LINE
PLAM	- PLASTIC LAMINATE
PLAS	- PLASTER
PLT	- PLATE
PLWD	- PLYWOOD
PNL	- PANEL
PNT	- PAINT (ED)
POC	- POINT OF CONNECTION
PT	- POINT
PTN	- PARTITION
PVA	- POLYVINYL ACETATE
QTY	- QUANTITY
R	- RADIUS
RD	- ROOF DRAIN
REF	- REFERENCE
REFR	- REFRIGERATOR
REINF	- REINFORCE (D), (ING)
RMV	- REMOVE
REQ'D	- REQUIRED
RES	- RESILIENT
RET	- RETURN
REV	- REVISION (S), REVISED
RFG	- ROOFING
RFL	- REFLECT (ED), (IVE), (OR)
RH	- RIGHT HAND
RL	- RIDGE LINE
RM	- ROOM
RO	- ROUGH OPENING
ROW	- RIGHT OF WAY
ROWD	- REDWOOD
RWL	- RAINWATER LEADER
SC	- SEALED CONCRETE
SCH	- SCHEDULE
SD	- STORM DRAIN
SEC	- SECTION
SHLF	- SHELF
SHLV	- SHELVING
SHT	- SHEET
SHTG	- SHEATHING
SIM	- SIMILAR
SKL	- SKYLIGHT
S/P	- SHELF & POLE
SPEC	- SPECIFICATION (S)
SQ	- SQUARE
SF	- SQUARE FEET
SS	- STAINLESS STEEL
STD	- STANDARD
STL	- STEEL
STO	- STORAGE
STRUC	- STRUCTURE/STRUCTURAL
SV	- SHEET VINYL
SYS	- SYSTEM
T	- TILE
TB	- TOWEL BAR
T&B	- TOP & BOTTOM
TELE	- TELEPHONE
TEMP	- TEMPERED
T&G	- TONGUE AND GROOVE
THK	- THICK (NESS)
THRU	- THROUGH
TJ	- TOOL JOINT
TKBD	- TACKBOARD
TM	- TOP OF MASONRY
TOB	- TOP OF BEAM
TOC	- TOP OF CURB or CONCRETE
TP	- TOILET PARTITION
TS	- TOP OF SHEATHING
TSB	- RUBBER TOP SET BASE
TOP	- TOP OF SLAB
T&T	- T-BAR ACOUSTIC TILE
TV	- TELEVISION
TYP	- TYPICAL
TOW	- TOP OF WALL
UON	- UNLESS OTHERWISE NOTED
VAR	- VARIES
VB	- VAPOR BARRIER
VCT	- VINYL COMPOSITION TILE
VCTB	- VINYL COVERED TACKBOARD
VERT	- VERTICAL
VG	- VERTICAL GRAIN
VNR	- VENEER
VO	- VENT OVER/OFFSET
VR	- VENT RISER
VTR	- VENT THROUGH ROOF
VWC	- VINYL WALL COVERING
W/	- WITH
WC	- WATER CLOSET
WD	- WOOD
WFG	- WIRED FIXED GLASS
WHC	- WALL HUNG CABINET
WI	- WROUGHT IRON
WIN	- WINDOW
WM	- WIRE MESH
W/O	- WITHOUT
WP	- WATERPROOFING
WST	- WASTE
WWF	- WELDED WIRE FABRIC
@	- AT
℄	- CENTER LINE
ø	- DIAMETER
□	- SQUARE FEET

SYMBOLS

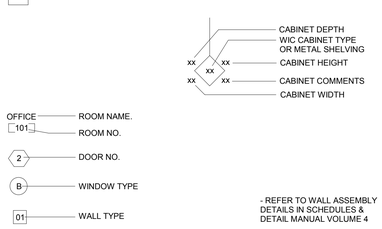

- REFER TO WALL ASSEMBLY DETAILS IN SCHEDULES & DETAIL MANUAL VOLUME 4

APPLICABLE CODES

APPLICABLE CODE OF REGULATIONS C.C.R.

PART 1 2016 CALIFORNIA BUILDING STANDARDS ADMINISTRATIVE CODE,TITLE 24 C.C.R.

PART 2 2016 CALIFORNIA BUILDING CODE (CBC), TITLE 24 C.C.R.
(BASED ON THE 2015 INTERNATIONAL EXISTING BUILDING CODE OF THE INTERNATIONAL CODE COUNCIL, WITH CALIFORNIA AMENDMENTS)

PART 3 2016 CALIFORNIA ELECTRICAL (CEC), TITLE 24 C.C.R.
(2014 NATIONAL ELECTRICAL CODE OF THE NATIONAL FIRE PROTECTION ASSOCIATION, NFPA)

PART 4 2016 CALIFORNIA MECHANICAL CODE (CMC),TITLE 24 C.C.R.
(2015 UNIFORM MECHANICAL CODE OF THE INTERNATIONAL ASSOCIATION OF PLUMBING AND MECHANICAL OFFICIALS, IAPMO)

PART 5 2016 CALIFORNIA PLUMBING CODE (CPC), TITLE 24 C.C.R.
(2015 UNIFORM MECHANICAL CODE OF THE INTERNATIONAL ASSOCIATION OF PLUMBING AND MECHANICAL OFFICIALS, IAPMO)

PART 6 2016 CALIFORNIA ENERGY CODE, TITLE 24 C.C.R.

PART 8 2016 CALIFORNIA HISTORICAL CODE, TITLE 24 C.C.R.

PART 9 2016 CALIFORNIA FIRE CODE, TITLE 24 C.C.R.
(2015 INTERNATIONAL FIRE CODE OF THE INTERNATIONAL CODE COUNCIL)

PART 10 2016 CALIFORNIA EXISTING BUILDING CODE, TITLE 24 C.C.R.
(2015 INTERNATIONAL EXISTING BUILDING CODE OF THE INTERNATIONAL CODE COUNCIL, WITH AMENDMENTS)

PART 11 2016 CALIFORNIA GREEN BUILDING STANDARDS CODE (CALGreen Code), TITLE 24 C.C.R.

PART 12 2016 CALIFORNIA REFERENCED STANDARDS, TITLE 24 C.C.R.

GENERAL NOTES

1. PLAN DIMENSIONS SHOWN FOR NEW CONSTRUCTION ARE TAKEN TO FACE OF STUD OR FACE OF CONCRETE UNLESS OTHERWISE NOTED.

2. HEIGHTS SHOWN OR NOTED AFF (ABOVE FINISH FLOOR) ARE TO BE MEASURED FROM TOP OF FINISH FLOORING MATERIAL. EXCEPTION: AT AREAS THAT RECEIVE COATINGS OR RESILIENT FLOORING, HEIGHTS ARE TO BE MEASURED FROM TOP OF CONCRETE SLAB.

3. DO NOT SCALE DRAWINGS. IF UNABLE TO LOCATE DIMENSIONS FOR ANY ITEM OF WORK, CONSULT ARCHITECT FOR DIRECTION BEFORE PROCEEDING.

4. IF DRAWINGS MEASURE LESS THAN 30" x 42", PRINTS ARE REDUCED FROM ORIGINALS.

5. DETAILS SHOWN ON DRAWINGS SHALL BE INCORPORATED INTO THE PROJECT AT ALL APPROPRIATE LOCATIONS WHETHER SPECIFICALLY REFERENCED AT EACH LOCATION OR NOT.

6. ADJUNCT CONSTRUCTION - THE EMBEDMENT OR PASSAGE OF PIPING, ELECTRICAL CONDUIT, DUCTWORK AND OTHER MATERIALS THAT WOULD REDUCE THE STRENGTH OF MASONRY OR CONCRETE WALLS OR FOOTINGS OR FRAMING IS NOT PERMITTED UNLESS THE WORK IS DONE IN ACCORDANCE WITH THE STANDARD DETAILS SHOWN ON THE DRAWINGS. THIS WORK MUST BE APPROVED BY THE PROJECT INSPECTOR PRIOR TO CLOSING IN OR CASTING. SEE STANDARD DETAILS AND SPECIFICATIONS FOR THE RELATIONSHIP OF UNDERGROUND CONDUIT AND PIPING TO FOUNDATIONS, FOR OPENINGS, FOR PIPING IN WALLS AND OTHER SPECIAL CONDITIONS DESIGNED FOR THIS PROJECT.

7. WHERE PLAN NOTES CALL FOR THE CONTRACTORS TO INSTALL SPECIAL ITEMS IT IS TO BE EXPLICITLY UNDERSTOOD THAT THE CONTRACTOR IS TO ALSO PROVIDE THAT ITEM AND ALL ACCESSORY EQUIPMENT TO INSTALL THAT ITEM. IF ITEM IS TO BE PROVIDED BY OWNER IT WILL BE SO INDICATED.

8. IT SHALL BE THE RESPONSIBILITY OF THE BIDDERS TO CONFIRM EXISTING CONDITIONS ABOVE GRADE AND VISIBLE AND VERIFY w/ EXISTING PLANS FOR EXISTING CONDITIONS NOT VISIBLE FROM SURFACE.

9. CONTRACTOR SHALL REPAIR ALL LANDSCAPE AND PAVED AREAS TO PRECONSTRUCTION CONDITION FROM DAMAGE DURING CONSTRUCTION. PROVIDE PHOTOGRAPHS PRIOR TO STARTING WORK

10. IN WORK AREAS, CONTRACTOR SHALL FIELD VERIFY ALL EX UNDERGROUND UTILITIES PRIOR TO START OF CONSTRUCTION AND CONTACT COLLEGE MAINTENANCE DEPARTMENT AND ALL UTILITY COMPANIES FOR VERIFICATION OF ALL UNDERGROUND UTILITIES.

11. ALL BURIED STEEL PIPE AND FERROUS METAL OBJECTS SHOULD BE PROVIDED WITH A PROTECTIVE COATING. COORDINATE w/ ARCHITECT AND ENGINEERS FOR THIS REQUIREMENT PER SOILS REPORT.

PROJECT DIRECTORY

ARCHITECT
EDGAR L. CHILDRES
KLASSEN CORPORATION
2021 WESTWIND DR.
BAKERSFIELD, CA 93301
PHONE: (661) 324-3000
FAX: (661) 327-5933
edc@klassencorp.com

MECHANICAL
FRANK CANTELMI
CANTELMI ENGINEERING
1800 21st ST # C
BAKERSFIELD, CA 93301
PHONE: (661) 324-5252
FAX: (661) 324-8439
cantelmi@cantelmi.net

STRUCTURAL
BRIAN BARCUS, S.E.
BARCUS STRUCTURAL ENG.
7600 NORTH PALM AVE. #200
FRESNO, CA 93711
PHONE: (559) 261-8585
FAX: (559) 261-8580
brian@barcusinc.com

ELECTRICAL
FRANK CANTELMI
CANTELMI ENGINEERING
1800 21st ST # C
BAKERSFIELD, CA 93301
PHONE: (661) 324-5252
FAX: (661) 324-8439
cantelmi@cantelmi.net

PLUMBING
FRANK CANTELMI
CANTELMI ENGINEERING
1800 21st ST # C
BAKERSFIELD, CA 93301
PHONE: (661) 324-5252
FAX: (661) 324-8439
cantelmi@cantelmi.net

APPROVAL

Construction Documents Approval

I have reviewed this Construction Document Phase submittal and find it in conformance with San Joaquin Valley Pulmonary's program, design criteria, objectives, and instructions given to Klassen Corporation. My signature below confirms Owner's approval of these Construction Documents and authorizes Klassen Corporation to proceed with Governing Agency Submittal.

Project Owner:

Print Name

Title

Signature Date

Print Name

Title

Signature Date

VICINITY MAP

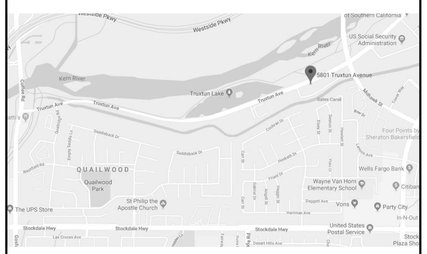

N.T.S.

SHEET INDEX

A0.00 COVER SHEET

ARCHITECTURAL:

A1.01 SITE PLAN
AG.01 CODE ANALYSIS
D2.01 DEMOLITION FLOOR PLAN
D3.01 DEMOLITION REFLECTED CEILING PLAN
A2.01 FLOOR PLAN
A2.02 ENLARGED DIMENSION FLOOR PLAN
A3.01 REFLECTED CEILING PLAN
A6.01 BUILDING SECTIONS
A7.01 FINISH SCHEDULE
A7.02 DOOR & WINDOW SCHEDULES
A8.01 INTERIOR ELEVATIONS
A9.01 ACCESSIBILITY DETAILS
A9.02 ARCHITECTURAL DETAILS
A9.03 ARCHITECTURAL DETAILS

STRUCTURAL:

S1.0 Structural Specifications, Plan & Detail

PLUMBING:

P1.0 PLUMBING GENERAL NOTES
P2.0 PLUMBING PLANS
P3.0 PLUMBING PLANS
P4.0 PLUMBING ROOF LPLAN AND SCHEDULES
P5.0 PLUMBING PLAN MEDICAL GAS (OXYGEN)
P6.0 PLUMBING DETAILS

MECHANICAL:

M1.0 GENERAL MECHANICAL NOTES
M2.0 MECHANICAL PLANS
M3.0 MECHANICAL ROOF PLAN
M4.0 MECHANICAL SCHEDULES
M5.0 MECHANICAL DETAILS

ELECTRICAL:

E1.0 GENERAL ELECTRICAL NOTES
E2.0 POWER DEMOLITION FLOOR PLAN
E3.0 LIGHTING DEMOLITION FLOOR PLAN
E4.0 LIGHTING FLOOR PLAN
E5.0 POWER FLOOR PLAN
E6.0 ELECTRICAL ROOF PLAN
E7.0 PARTIAL ELECTRICAL PLAN PDES PLAN
E8.0 PDES PLAN
E9.0 ELECTRICAL DETAILS
EC.1 TITLE 24
EC.2 TITLE 24

PROPERTY INFORMATION

ADDRESS: 5801 TRUXTUN AVE, BAKERSFIELD CA 933309

APN #: 331-34-32

PM:6791

Klassen corporation
Architecture Construction
2021 Westwind Drive
Bakersfield, CA 93301
(661) 324-3000
(661) 324-3900 Fax
www.klassencorp.com

LICENSED ARCHITECT
EDGAR L. CHILDRES
C14520
Exp. 9-30-19
STATE OF CALIFORNIA

The above drawings and specifications and ideas, designs and arrangements represented thereby are and shall remain the property of the architect and no part thereof shall be copied, disclosed to others or used in connection with any work other than the specific project for which they have been prepared and developed without the written consent of the architect. Visual contact with these drawings or specifications shall constitute conclusive evidence of acceptance of these restrictions.

Written dimensions on these drawings shall have precedence over scaled dimension; contractors shall verify and be responsible for, all dimensions and conditions on the job and this office must be notified of any variation from the dimensions and conditions shown by these drawings. Shop details must be submitted to this office for approval before proceeding with fabrication.

TENANT IMPROVEMENTS
SAN JOAQUIN VALLEY PULMONARY
5801 TRUXTUN AVE, BAKERSFIELD CA 933309

MARK	ISSUED FOR	DATE
△	OWNER CD & GA SUBMITTAL	08/15/19
△	BIDDING	08/23/19
△		
△		
△		
△		
△		

Project No. : 05-1-19504

COVER SHEET

A0.00

FLATWORK REMOVAL IMAGE

N.T.S.

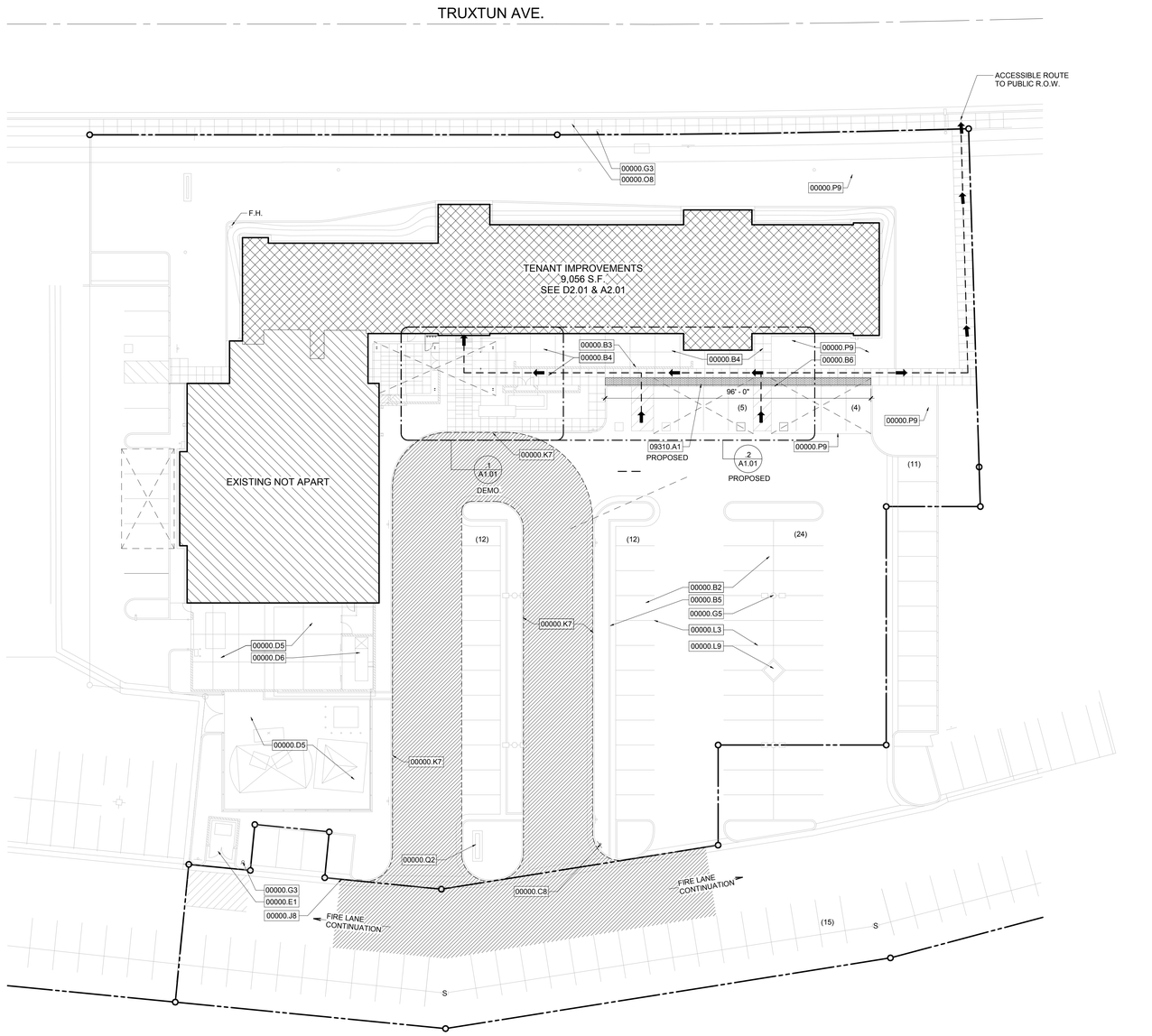

SITE PLAN

1" = 20'-0"

GRAPHIC SCALE 0 20 40 60

WORKING NORTH TRUE NORTH

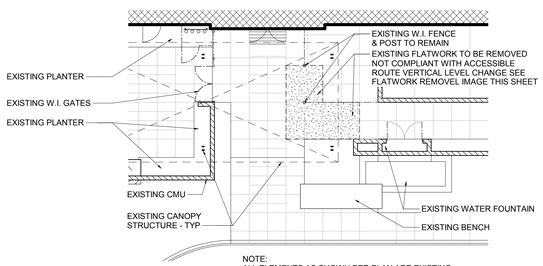

NOTE:
ALL ELEMENTS AS SHOWN PER PLAN ARE EXISTING AND ONLY THOSE NOTED ARE FOR CLARITY OF SCOPE OF WORK.

ENLARGED DEMOLITION SITE PLAN

1" = 10'-0"

GRAPHIC SCALE 0 10 20 30

WORKING NORTH TRUE NORTH

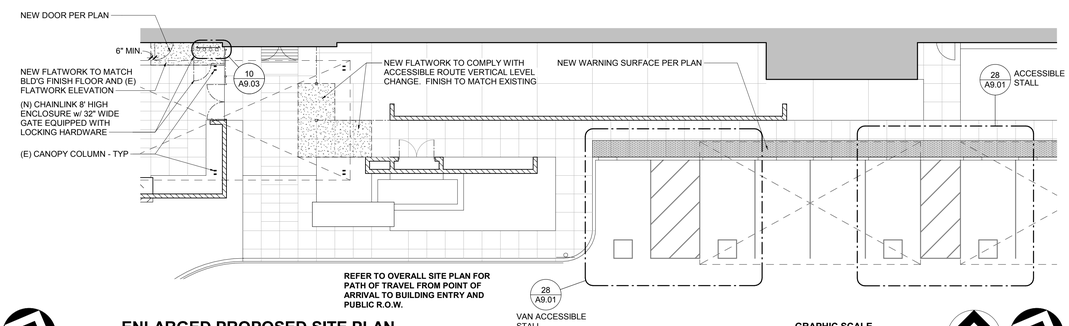

REFER TO OVERALL SITE PLAN FOR PATH OF TRAVEL FROM POINT OF ARRIVAL TO BUILDING ENTRY AND PUBLIC R.O.W.

ENLARGED PROPOSED SITE PLAN

1" = 10'-0"

GRAPHIC SCALE 0 10 20 30

WORKING NORTH TRUE NORTH

KEYNOTES

NOTE: KEYNOTES ARE TYPICAL WHERE SIMILAR CONDITION OCCURS

KEY NO.	DESCRIPTION
00000.B2	(E) A/C PAVING
00000.B3	(E) CMU WALL
00000.B4	(E) CONCRETE WALK
00000.B5	(E) CURB GUTTER
00000.B6	(E) FLUSH CURB TO REMAIN
00000.C8	(E) PARKING WARNING ENTRY SIGN
00000.D5	(E) UTILITY YARD
00000.D6	(E) ELECTRIC BACKUP GENERATOR
00000.E1	(E) TRASH BIN
00000.G3	(E) FIRE HYDRANT
00000.G5	(E) LIGHT STANDARD
00000.J8	PROPERTY LINE
00000.K7	(E) FIRE LANE w/ SIGNAGE & CONC. CURB PAINTED RED
00000.L3	(E) PAINTED PARKING STRIPE
00000.L9	(E) PLANTER AREA
00000.O8	(E) CURB, GUTTER, & SIDEWALK
00000.P9	(E) STRUCTURE TO REMAIN
00000.Q2	(E) MONUMENT SIGN
09310.A1	CAST-IN-PLACE TACTILE DETECTABLE WARNING SURFACE TILE

SITE NOTES

1. CAST-IN-PLACE DETECTABLE TRUNCATED DOME WARNING SURFACE TO BE "ARMOR-TILE TACTILE SYSTEMS" PRODUCT OR EQUAL APPROVED. PRODUCT FEATURES: 24"x36" TILE SIZE, AND, COLOR TO BE FEDERAL YELLOW #33538

SITE LEGEND

FIRE DEPARTMENT ACCESS ROAD WITH MIN. 20' WIDTH , RED CURBS AND NO PARKING SIGNS SPACED AS REQUIRED: 0.21' TYPE "B" A.C. OVER 0.42' CLASS II AGG. BASE OVER 1' OF COMPACTED NATIVE SOIL

EXISTING BUILDING

PROPOSED TENANT IMPROVEMENTS UNDER THIS PERMIT APPLICATION

ACCESSIBLE BUILDING ENTRANCE

ACCESSIBLE PATH OF TRAVEL (P.O.T.) AS INDICATED ON PLAN IS A BARRIER - FIRE ACCESS ROUTE WITHOUT ANY ABRUPT LEVEL CHANGES EXCEEDING ½" 8' BEVELED AT 1:2 MAX. SLOPE OR VERTICAL LEVEL CHANGES NOT EXCEEDING ¼" MAX. AND AT LEAST 48" IN WIDTH. SURFACE IS STABLE, FIRM AND SLIP RESISTANT. CROSS SLOPE DOES NOT EXCEED 2% AND SLOPE IN THE DIRECTION OF TRAVEL IS LESS THAN 5% UNLESS OTHERWISE INDICATED. ACCESSIBLE PATH OF TRAVEL SHALL BE MAINTAINED FREE OF OVERHANGING OBSTRUCTIONS TO 80" MIN. AND PROTRUDING OBJECTS GREATER THAN 4" PROJECTION FROM WALL AND ABOVE 27" AND LESS THAN 80". AOR SHALL VERIFY THAT THERE ARE NO BARRIERS ALONG THE P.O.T.

PARKING ANALYSIS

PER C.O.B. MUNICIPAL CODE 17.58.110, PARKING REQUIRED:

PROPOSED T.I. MEDICAL OFFICE 9,056 (1/200)	46 STALLS
EXISTING 6,270 S.F. OFFICE (1/250 S.F.)	25 STALLS
TOTAL REQUIRED:	71 STALLS
TOTAL EXISTING PARKING SPACES:	83 STALLS
PARKING STALLS:	9' x 20' (TYPICAL)

PER 2016 CBC, 11B-208.2 & 11B-208.2.4:
4 ACCESSIBLE SPACES REQUIRED (INCLUDES 1 VAN ACCESSIBLE STALL)

NOTE:
TWO EXISTING ACCESSIBLE (1 VAN ACCESSIBLE STALL) SPACES TO BE UPDATED TO COMPLY WITH 2016 CBC REQUIREMENTS AND TWO EXISTING COMMON PARKING SPACES CONVERTED TO ACCESSIBLE STALLS, PER PLAN.

CalGreen NOTES

5.410.2 Commissioning.
Proposed work under this permit application is for an alteration and Tenant Improvement (T.I.) is under 10,000s.f., therefore, this section of the CalGreen code **not applicable.**

5.106.4.1 Short-term bicycle parking.
No "new visitor motorized parking spaces beign added", therefore, this section of theCalGreen code **not applicable.**

5.106.4.1.3 Long-Term bicycle parking.
Proposed work under this permit application is an alteration of an existing building, Tenant Improvement (T.I.), and per parking analysis, proposed work will not add parking spaces, therfore, this section of the CalGreen code **not applicable.**

5.106.5.2. Designated parking for clean air vehicles.
Proposed work under this permit application will not add parking spaces, therfore, this section of theCalGreen code **not applicable.**

Section 5.106.5.3 in its entirely is for new construction [N], therefore, this section of theCalGreen code **not applicable.**

Klassen corporation
Architecture Construction
2021 Westwind Drive
Bakersfield, CA 93301
(661) 324-3000
(661) 324-3900 Fax
www.klassencorp.com

LICENSED ARCHITECT EDGAR L. CRUZ C14520 REN 9.30.19 STATE OF CALIFORNIA

The above drawings and specifications and ideas, designs and arrangements represented thereby are and shall remain the property of the architect and no part thereof shall be copied, disclosed to others or used in connection with any work other than the specific project for which they have been prepared and developed without the written consent of the architect. Visual contact with these drawings or specifications shall constitute conclusive evidence of acceptance of these restrictions.

Written dimensions on these drawings shall have precedence over scaled dimension; contractors shall verify and be responsible for, all dimensions and conditions on the job and this office must be notified of any variation from the dimensions and conditions shown by these drawings. Shop details must be submitted to this office for approval before proceeding with fabrication.

TENANT IMPROVEMENTS
SAN JOAQUIN VALLEY PULMONARY
5801 TRUXTUN AVE, BAKERSFIELD CA 933309

MARK	ISSUED FOR	DATE
	OWNER CD & GA SUBMITTAL	08/15/19
	BIDDING	08/23/19

Project No. : 05-1-19504

SITE PLAN

A1.01

BUILDING CODE ANALYSIS

GENERAL DESCRIPTION:	OFFICE, CLINIC, OUTPATIENT
OCCUPANCY:	"B"
CONSTRUCTION TYPE:	"V-B"
FIRE SEPARATION:	NOT REQUIRED
FIRE SPRINKLERS:	YES; EXISTING
ACTUAL BUILDING HEIGHT:	22'
ACTUAL NUMBER OF STORIES:	1
ALLOWABLE AREA:	92,000 S.F.
ALLOWABLE HEIGHT:	75'
ALLOWABLE INCREASES:	NOT REQUIRED
TOTAL ACTUAL AREA:	***9,056 S.F.***

EXIT ANALYSIS

EXIT

1ST FLOOR: 115 OCC. x 0.2 = 23.0" REQ'D

TOTAL = 23.0" REQ'D
180" PROVIDED

NOTE:
EXIT ACCESS TRAVEL DISTANCE NOT EXCEEDED;
PER ***CBC TABLE 1017.2.*** (300' MAX.)

PLUMBING FIXTURE ANALYSIS

GROUP B - OFFICE, CLINIC, OUTPATIENT (1:200 FACTOR)

9,056 SF/200 = **46 TOTAL OCCUPANTS**

= **23 MALE / 23 FEMALE**

FIXTURES REQUIRED:

MEN: **1 WATER CLOSET**
1 URINAL
1 LAVATORY

WOMEN: **2 WATER CLOSETS**
1 LAVATORY

DRINKING FOUNTAIN: 1
SERVICE SINK: 1

FIXTURES PROVIDED:

(E) MEN: **2 WATER CLOSET**
1 URINAL
2 LAVATORY

(E) WOMEN: **3 WATER CLOSETS**
2 LAVATORY

(N) UNISEX: **4 WATER CLOSETS**
4 LAVATORY

DRINKING FOUNTAIN: 1
SERVICE SINK: 1

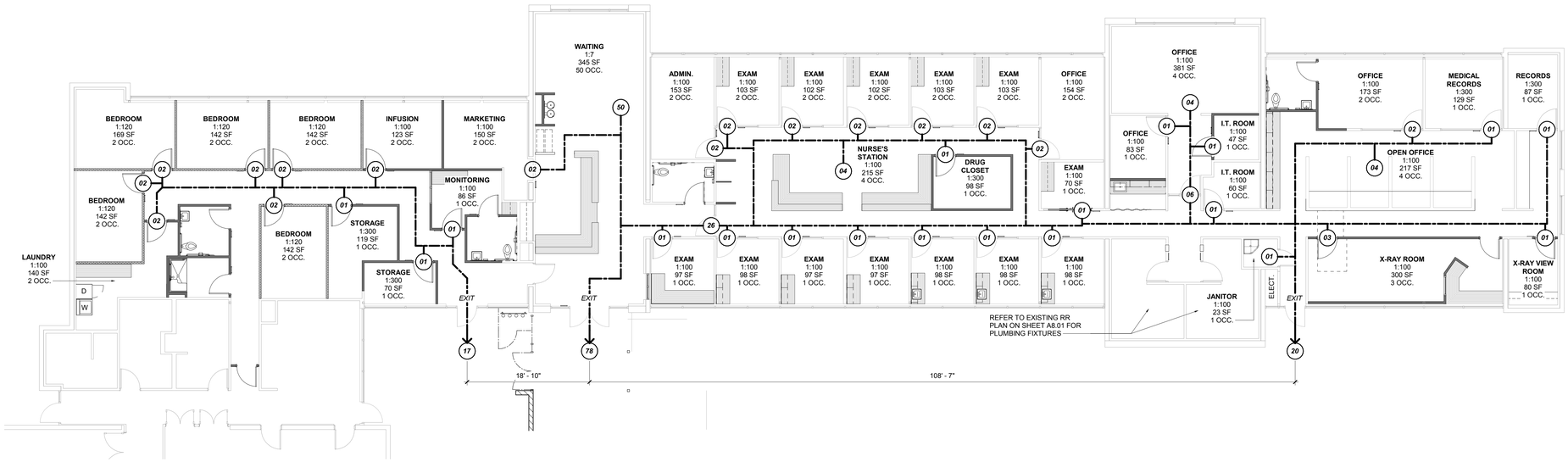

CODE ANALYSIS PLAN

1/8" = 1'-0"

GRAPHIC SCALE
0 8 16 24

WORKING NORTH
TRUE NORTH

Klassen corporation
Architecture Construction
2021 Westwind Drive
Bakersfield, CA 93301
(661) 324-3000
(661) 324-3900 Fax
www.klassencorp.com

LICENSED ARCHITECT
EDGAR L. CRUZADO
C14520
EXP. 9-30-19
STATE OF CALIFORNIA

The above drawings and specifications and ideas, designs and arrangements represented thereby are and shall remain the property of the architect and no part thereof shall be copied, disclosed to others or used in connection with any work other than the specific project for which they have been prepared and developed without the written consent of the architect. Visual contact with these drawings or specifications shall constitute conclusive evidence of acceptance of these restrictions.

Written dimensions on these drawings shall have precedence over scaled dimension; contractors shall verify and be responsible for, all dimensions and conditions on the job and this office must be notified of any variation from the dimensions and conditions shown by these drawings. Shop details must be submitted to this office for approval before proceeding with fabrication.

TENANT IMPROVEMENTS
SAN JOAQUIN VALLEY PULMONARY
5801 TRUXTUN AVE, BAKERSFIELD CA 933309

DATE	ISSUED FOR	MARK
08/15/19	OWNER CD & GA SUBMITTAL	
08/23/19	BIDDING	

Project No. : 05-1-19504

CODE ANALYSIS PLAN

AG.01

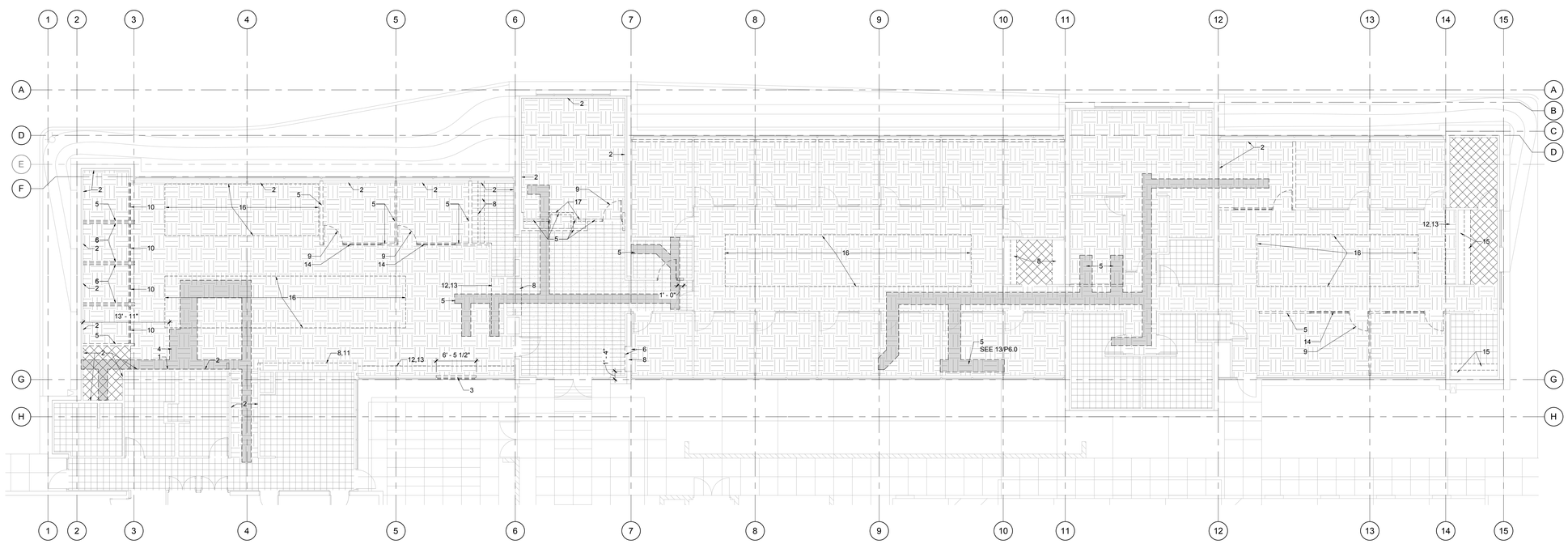

DEMO FLOOR PLAN

1/8" = 1'-0"

GRAPHIC SCALE

0 8 16 24

WORKING NORTH

TRUE NORTH

DEMO KEYNOTES

NOTE:
DEMOLITION KEYNOTES ARE APPLICABLE AT ALL SIMILAR CONDITIONS WHERE OCCUR.

1. REMOVE WHITE MARKER BOARDS.
2. REMOVE EXISTING BASE.
3. REMOVE PARTIAL WINDOW SYSTEM AS SHOWN.
4. REMOVE PARTIAL FLOOR SLAB TO ALLOW NEW CONSTRUCTION.
5. REMOVE STUD WALL AS SHOWN.
6. REMOVE PARTIAL STUD WALL AS SHOWN.
7. REMOVE PARTIAL CMU WALL AS SHOWN. SEE GENERAL NOTE #2.
8. REMOVE BUILT-IN CABINETRY.
9. REMOVE DOOR & FRAME.
10. REMOVE GLASS SLIDING DOOR.
11. REMOVE SOFFIT.
12. REMOVE FILE CABINTES.
13. REMOVE COUNTERTOP.
14. REMOVE WINDOW SYSTEM.
15. BUILT-IN CABINETRY TO REMAIN.
16. REMOVE CUBICLE FURNITURE & DEMOUNTABLE WALL SYSTEM.
17. REMOVE WALL/SOFFIT WITH WOOD FINISH - SOFFIT FRAMING TO REMAIN.

GENERAL NOTES

1. **CARPET, FURNITURE, CANIBETRY AND SALVAGEABLE ITEMS:** CONTRACTOR SHALL VERIFY WITH OWNER ALL ITEMS/ELEMENTS TO BE REMOVED AND VERIFY/CONFIRM OWNER WANTS TO SALVAGE AND PROTECT.
2. ROUGH OPENING TO BE 4'-5" WIDE BY 4'-5" HIGH WITH BOTTOM OF OPENING AT 30" ABOVE FINISH FLOOR TO ALLOW WINDOW SILL AT 34" ABOVE FINISH FLOOR MAX.

FLOOR DEMO LEGEND

(E) CARPET TO BE REMOVED SALVAGE & PROTECTED FOR RE-INSTALLATION.

(E) LIMESTONE FLOORING TO BE REMOVED

(E) VINYL COMPOSITION TILE TO BE REMOVED

DASHED LINE INDICATES WHERE TO SAWCUT AND REMOVE (E) CONCRETE SLAB TO ALLOW NEW WASTE LINE - SEE PLUMBING PLANS.

(E) TO REMAIN, UNLESS OTHERWISE NOTED. NOT APART.

Klassen corporation
Architecture Construction
2021 Westwind Drive
Bakersfield, CA 93301
(661) 324-3000
(661) 324-3900 Fax
www.klassencorp.com

LICENSED ARCHITECT
EDGAR L. GRUBB
C14520
REN 9-30-19
STATE OF CALIFORNIA

The above drawings and specifications and ideas, designs and arrangements represented thereby are and shall remain the property of the architect and no part thereof shall be copied, disclosed to others or used in connection with any work other than the specific project for which they have been prepared and developed without the written consent of the architect. Visual contact with these drawings or specifications shall constitute conclusive evidence of acceptance of these restrictions.

Written dimensions on these drawings shall have precedence over scaled dimension; contractors shall verify and be responsible for, all dimensions and conditions on the job and this office must be notified of any variation from the dimensions and conditions shown by these drawings. Shop details must be submitted to this office for approval before proceeding with fabrication.

TENANT IMPROVEMENTS
SAN JOAQUIN VALLEY PULMONARY
5801 TRUXTUN AVE, BAKERSFIELD CA 933309

DATE	ISSUED FOR	MARK
08/15/19	OWNER CD & GA SUBMITTAL	
08/23/19	BIDDING	

Project No. : 05-1-19504

FLOOR DEMOLITION PLAN

D2.01

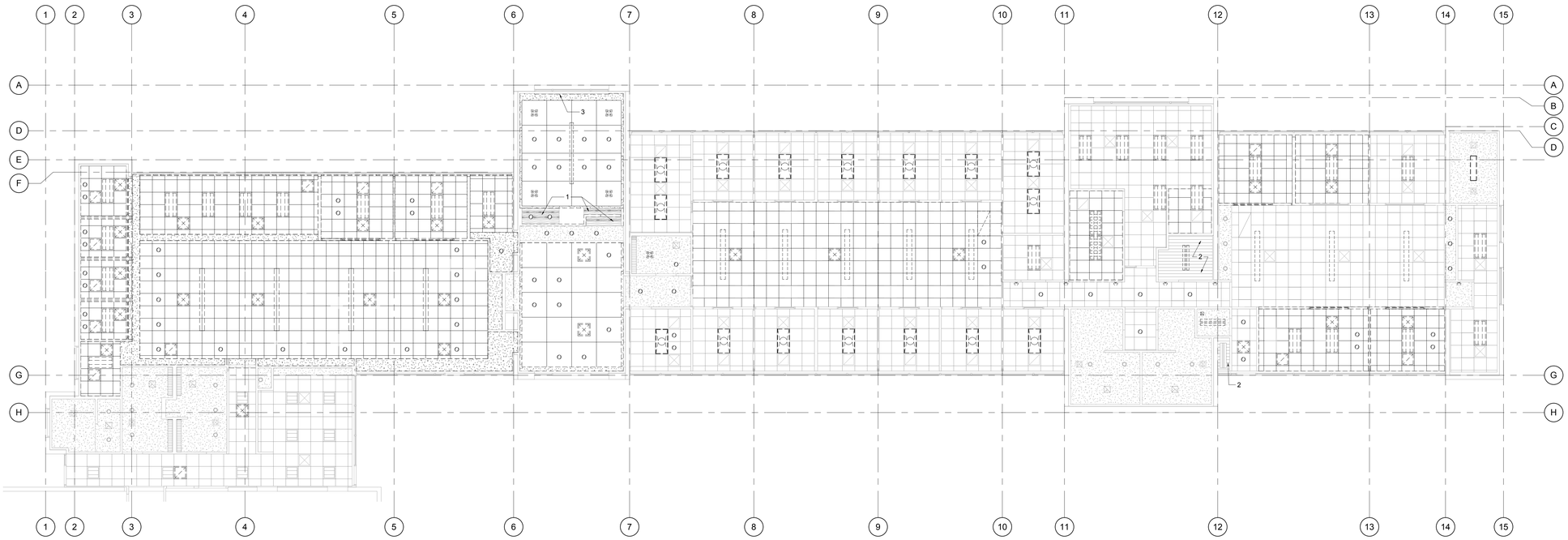

DEMO REFLECTED CEILING PLAN

1/8" = 1'-0"

GRAPHIC SCALE

0 8 16 24

WORKING NORTH

TRUE NORTH

DEMO KEYNOTES

NOTE:
DEMOLITION KEYNOTES ARE APPLICABLE AT ALL SIMILAR CONDITIONS WHERE OCCUR.

1. REMOVE SOFFIT WITH WOOD FINISH - SOFFIT FRAMING TO REMAIN.
2. EXPOSED METAL ROOF DECKING TO REMAIN.
3. EXISTING ELECTRIC PROJECTOR SCREEN TO BE REMOVED.

GENERAL NOTES

1. **SALVAGEABLE ITEMS:** CONTRACTOR SHALL VERIFY WITH OWNER ALL ITEMS/ELEMENTS TO BE REMOVED AND VERIFY/CONFIRM OWNER WANTS TO SALVAGE AND PROTECT.
2. REFER TO ELECTRICAL PLANS FOR DEMOLITION SCOPE OF WORK INFORMATION

CEILING DEMO LEGEND

- (E) 4X4 SUSPENDED ACOUSTICAL CEILING SYSTEM TO BE REMOVED
- (E) 2X2 SUSPENDED ACOUSTICAL CEILING SYSTEM TO BE REMOVED
- (E) 2X2 SUSPENDED ACOUSTICAL CEILING SYSTEM TO REMAIN
- (E) GYPSUM BOARD CEILING / SOFFIT TO BE REMOVED
- (E) GYPSUM BOARD CEILING / SOFFIT TO REMAIN
- (E) AIR TERMINAL TO BE REMOVED
- (E) AIR TERMINAL TO REMAIN
- (E) LIGHT FIXTURE TO BE REMOVED
- (E) LIGHT FIXTURE TO REMAIN

Klassen corporation
Architecture Construction
2021 Westwind Drive
Bakersfield, CA 93301
(661) 324-3000
(661) 324-3900 Fax
www.klassencorp.com

LICENSED ARCHITECT
EDGAR L. CRUZADO
C14520
REN 9-30-19
STATE OF CALIFORNIA

The above drawings and specifications and ideas, designs and arrangements represented thereby are and shall remain the property of the architect and no part thereof shall be copied, disclosed to others or used in connection with any work other than the specific project for which they have been prepared and developed without the written consent of the architect. Visual contact with these drawings or specifications shall constitute conclusive evidence of acceptance of these restrictions.

Written dimensions on these drawings shall have precedence over scaled dimension; contractors shall verify and be responsible for, all dimensions and conditions on the job and this office must be notified of any variation from the dimensions and conditions shown by these drawings. Shop details must be submitted to this office for approval before proceeding with fabrication.

TENANT IMPROVEMENTS
SAN JOAQUIN VALLEY PULMONARY
5801 TRUXTUN AVE, BAKERSFIELD CA 933309

MARK	ISSUED FOR	DATE
1	OWNER CD & GA SUBMITTAL	08/15/19
2	BIDDING	08/23/19
3		
4		
5		
6		
7		

Project No. : 05-1-19504

REFLECTED CEILING DEMOLITION PLAN

D3.01

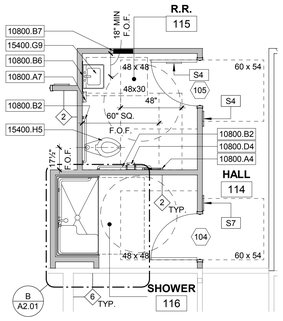

A ENLARGED PLAN
1/4" = 1'-0"

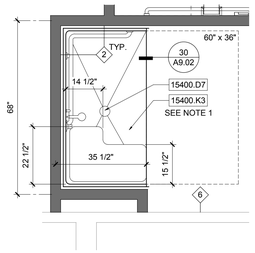

ROLL-IN SHOWER MODEL TYPE: FLORESTONE MODEL 35-62H
BARRIER-FREE SHOWER

B ENLARGED PLAN
1/2" = 1'-0"

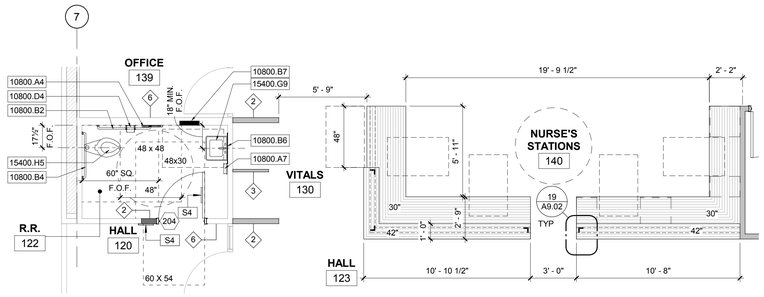

C ENLARGED PLAN
1/4" = 1'-0"

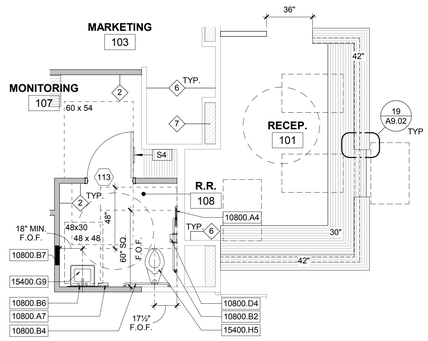

D ENLARGED PLAN
1/4" = 1'-0"

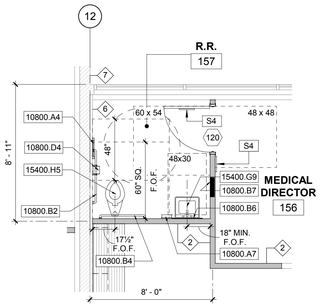

E ENLARGED PLAN
1/4" = 1'-0"

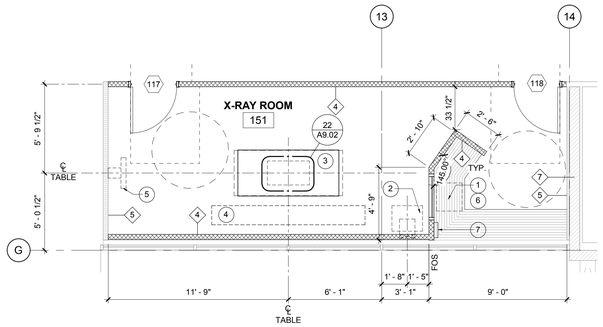

F ENLARGED PLAN
1/4" = 1'-0"

ENLARGED PLANS

GRAPHIC SCALE 0 4 8 12

WORKING NORTH · TRUE NORTH · INTERIOR ELEVATION KEY

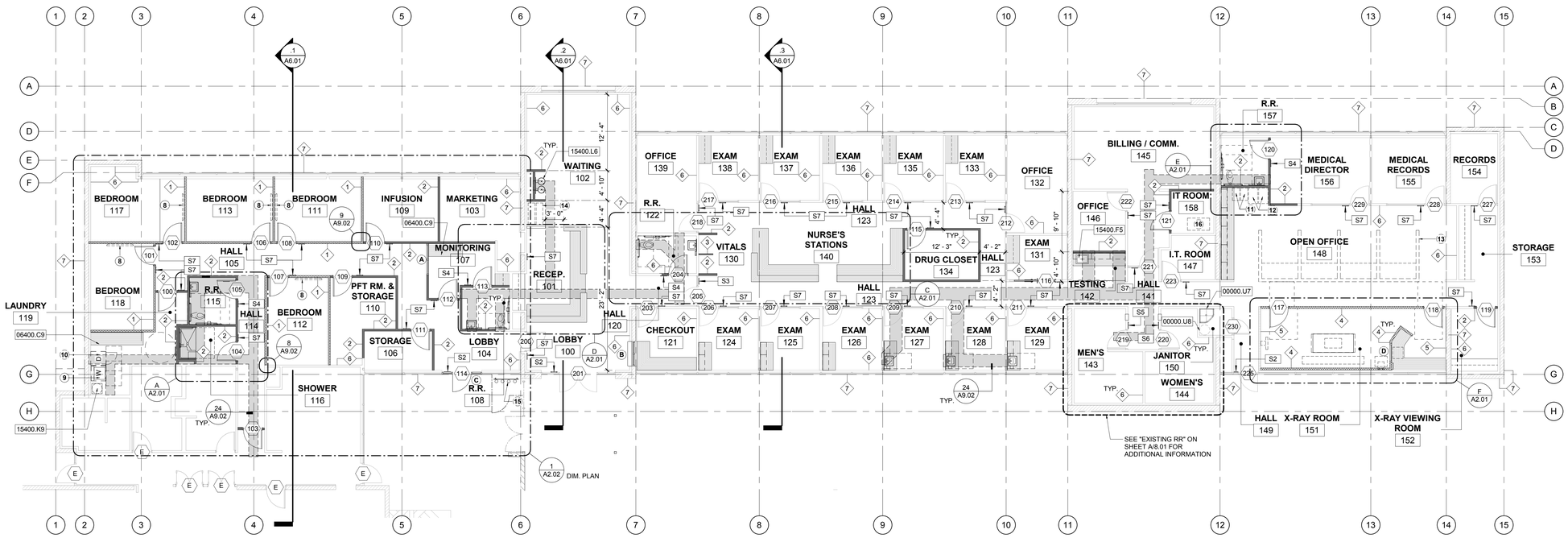

FLOOR PLAN
1/8" = 1'-0"

GRAPHIC SCALE 0 8 16 24

WORKING NORTH · TRUE NORTH · INTERIOR ELEVATION KEY

KEYNOTES

KEY NO.	DESCRIPTION
00000.U7	(E) JANITOR SINK
00000.U8	(E) WATER HEATER
06400.C9	LAMINATE PLASTIC COUNTERTOP w/ SPLASH, REFER TO FINISH SCHEDULE
10800.A4	TOILET SEAT COVER DISPENSER
10800.A7	SURFACE MOUNTED SOAP DISPENSER
10800.B2	GRAB BAR 48"L
10800.B4	GRAB BAR 36"L
10800.B6	STAINLESS STEEL MIRROR
10800.B7	PAPER TOWEL DISPENSER AND WASTE RECEPTACLE
10800.D4	SURFACE MOUNTED TOILET PAPER DISPENSER
15400.D7	FLOOR DRAIN, REFER TO PLUMBING PLANS
15400.F5	SINK, REFER TO PLUMBING PLANS
15400.G9	LAVATORY, REFER TO PLUMBING PLANS
15400.H5	TOILET, REFER TO PLUMBING PLANS
15400.K3	ROLL-IN SHOWER
15400.K9	WATER HEATER
15400.L6	ACCESSIBLE DRINKING FOUNTAIN, REFER TO PLUMBING PLANS

GENERAL NOTES

1. ROLL-IN SHOWER UNIT INCLUDES THE FOLLOWING: STAINLESS STEEL CURTAIN ROD; PRESSURE BALANCE MIXING VALVE WITH CONCEALED CHECK STOPS; HAND-HELD SHOWER HEAD WITH HOSE 40" MIN. LENGTH; STAINLESS STEEL SLIDE BAR/GRAB BAR; STAINLESS STEEL CORNER GRAB BAR; STAINLESS STEEL RECESSED SOAP DISH; AND FOLDING WHEELCHAIR TRANSFER SEAT.

PLAN LEGEND

NOTE: ALL ITEMS INDICATED ON THIS LIST MAY NOT NECESSARILY OCCUR ON THIS SHEET.

1. (N) 4" METAL STUDS AT 16" O.C. WITH 5/8" GYP BD ON SLEEP ROOM SIDE AND SOUND CLIPS WITH 5/8" GYP BD ON OPPOSITE SIDE. FULL HEIGHT TO 6" ABOVE CEILING LINE (SEE 7/A9.02 FOR ASSEMBLY)
2. (N) 4" METAL STUD WALL @ 16" O.C. WITH (N) 5/8" GYP. BD. EACH SIDE. GYP. BD. REQUIRED ONE SIDE ONLY @ FURRED WALLS. PROVIDE GREEN BD. IN WET AREAS.
3. (N) 2" METAL STUD WALL @ 16" O.C. WITH (N) 5/8" GYP. BD. EACH SIDE. GYP. BD. REQUIRED ONE SIDE ONLY @ FURRED WALLS. PROVIDE GREEN BD. IN WET AREAS.
4. (N) 4" METAL STUD WALL @ 16" O.C. WITH (N) 5/8" LEAD-LINED GYP. BD. ON X-RAY ROOM SIDE. (N) REGULAR 5/8" GYP. BD. @ OPPOSITE SIDE. REGULAR 5/8" GYP. BD. NOT REQUIRED @ FURRED WALLS. (SEE 5/A9.03 FOR INSTALLATION)
5. (E) METAL STUD WALL @ 16" O.C. WITH (N) 5/8" LEAD-LINED GYP. BD. ON X-RAY ROOM SIDE.
6. (E) METAL STUD WALL @ 16" O.C.
7. (E) CMU WALL

TYPICAL CONC. SLAB PATCH PER 24/A9.04

SIGN LEGEND

S1	BUILDING ENTRY ACCESSIBILITY (SIGN PER DETAIL 11/A9.01)
S2	EXIT (SIGN PER DETAIL 7/A9.01)
S3	EXIT ROUTE (SIGN PER DETAIL 7/A9.01)
S4	UNISEX TOILET ROOM (SIGN PER DETAIL 13/A9.01)
S5	EXISTING MEN'S TOILET RM. SIGN COMPLIANT w/ 13/A9.01)
S6	EXISTING WOMEN'S TOILET RM. SIGN COMPLIANT w/ 13/A9.01)
S7	ROOM NAME SIGN (SIGN PER DETAIL 11/A9.01)

EQUIPMENT SCHEDULE

DISCLAIMER:
EQUIPMENT LIST BELOW IS **NOT** INTENDED TO DEPICT **ALL** O.F.O.I. ITEMS. ITEMS LISTED ARE SHOWN TO CLARIFY DESIGN CONDITIONS.

NOTE:
CONTRACTOR SHALL COORDINATE AND FACILITATE FIELD INSPECTIONS AS REQUIRED, PERFORMED BY OWNER AND/OR OWNER'S VENDOR FOR X-RAY ROOM EQUIPMENT AND REQUIREMENTS THEREOF. OWNER AND/OR VENDOR SHALL FIELD VERIFY ALL INFRASTRUCTURE FOR SUCH IS IN CONFORMANCE WITH X-RAY ROOM EQUIPMENT.

O.F.O.I. - OWNER FURNISHED AND OWNER OR VENDOR INSTALLED

ITEM NO	O.F.O.I.	ITEM DESCRIPTION
01	●	WIDE SCREEN TOUCH PANEL MONITOR
02	●	ELECTRIC CURRENT CONVERTER CABINET
03	●	RADIOGRAPHIC TABLE
04	●	FLOOR MOUNTED TUBESTAND
05	●	VERTICAL WALL STAND
06	●	PC, MONITOR, & KEYBOARD
07	●	WIRELESS ACCESS POINT
08	●	TELEVISION
09	●	WASHER
10	●	DRYER
11	●	EKG UNIT
12	●	CONCENTRATORS
13	●	DEMOUNTABLE PARTITION WALL WORKSTATIONS
14	●	WHEELCHAIR
15	●	OXYGEN TANK
16	●	I.T. RACK

Klassen corporation
Architecture Construction
2021 Westwind Drive
Bakersfield, CA 93301
(661) 324-3000
(661) 324-3900 Fax
www.klassencorp.com

LICENSED ARCHITECT EDGAR L. CRUZADO C14520 REN 9.30.19 STATE OF CALIFORNIA

The above drawings and specifications and ideas, designs and arrangements represented thereby are and shall remain the property of the architect and no part thereof shall be copied, disclosed to others or used in connection with any work other than the specific project for which they have been prepared and developed without the written consent of the architect. Visual contact with these drawings or specifications shall constitute conclusive evidence of acceptance of these restrictions.

Written dimensions on these drawings shall have precedence over scaled dimension; contractors shall verify and be responsible for, all dimensions and conditions on the job and this office must be notified of any variation from the dimensions and conditions shown by these drawings. Shop details must be submitted to this office for approval before proceeding with fabrication.

TENANT IMPROVEMENTS
SAN JOAQUIN VALLEY PULMONARY
5801 TRUXTUN AVE, BAKERSFIELD CA 933309

MARK	ISSUED FOR	DATE
	OWNER CD & GA SUBMITTAL	08/15/19
	BIDDING	08/23/19

Project No. : 05-1-19504

FLOOR PLAN

A2.01

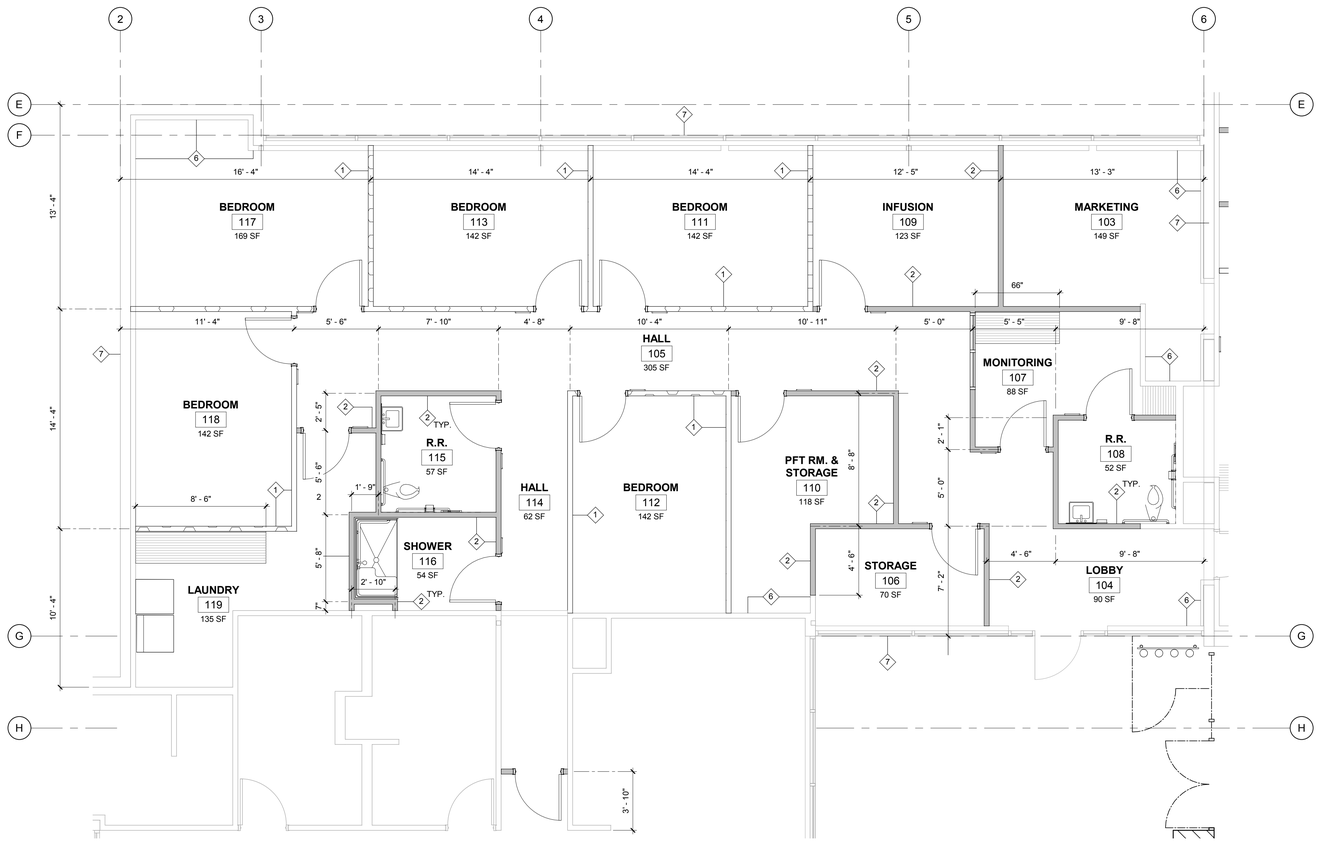

ENALRGED DIMENSION FLOOR PLAN

1/4" = 1'-0"

GRAPHIC SCALE

0 8 16 24

WORKING NORTH

TRUE NORTH

INTERIOR ELEVATION KEY

PLAN LEGEND

NOTE: ALL ITEMS INDICATED ON THIS LIST MAY NOT NECESSARILY OCCUR ON THIS SHEET.

1. (N) 4" METAL STUDS AT 16" O.C. WITH 5/8" GYP BD ON SLEEP ROOM SIDE AND SOUND CLIPS WITH 5/8" GYP BD ON OPPOSITE SIDE. FULL HEIGHT TO 6" ABOVE CEILING LINE (SEE 7/A9.02 FOR ASSEMBLY)
2. (N) 4" METAL STUD WALL @ 16" O.C. WITH (N) 5/8" GYP. BD. EACH SIDE. GYP. BD. REQUIRED ONE SIDE ONLY @ FURRED WALLS. PROVIDE GREEN BD. IN WET AREAS.
3. (N) 2" METAL STUD WALL @ 16" O.C. WITH (N) 5/8" GYP. BD. EACH SIDE. GYP. BD. REQUIRED ONE SIDE ONLY @ FURRED WALLS. PROVIDE GREEN BD. IN WET AREAS.
4. (N) 4" METAL STUD WALL @ 16" O.C. WITH (N) 5/8" LEAD-LINED GYP. BD. ON X-RAY ROOM SIDE. (N) REGULAR 5/8" GYP. BD. @ OPPOSITE SIDE. REGULAR 5/8" GYP. BD. NOT REQUIRED @ FURRED WALLS. (SEE 5/A9.03 FOR INSTALLATION)
5. (E) METAL STUD WALL @ 16" O.C. WITH (N) 5/8" LEAD-LINED GYP. BD. ON X-RAY ROOM SIDE.
6. (E) METAL STUD WALL @ 16" O.C.
7. (E) CMU WALL

TYPICAL CONC. SLAB PATCH PER 24/A9.04

Klassen corporation
Architecture Construction
2021 Westwind Drive
Bakersfield, CA 93301
(661) 324-3000
(661) 324-3900 Fax
www.klassencorp.com

LICENSED ARCHITECT
EDGAR L. CRUZADO
C14520
SIGN 9.30.19
STATE OF CALIFORNIA

The above drawings and specifications and ideas, designs and arrangements represented thereby are and shall remain the property of the architect and no part thereof shall be copied, disclosed to others or used in connection with any work other than the specific project for which they have been prepared and developed without the written consent of the architect. Visual contact with these drawings or specifications shall constitute conclusive evidence of acceptance of these restrictions.

Written dimensions on these drawings shall have precedence over scaled dimension; contractors shall verify and be responsible for, all dimensions and conditions on the job and this office must be notified of any variation from the dimensions and conditions shown by these drawings. Shop details must be submitted to this office for approval before proceeding with fabrication.

TENANT IMPROVEMENTS
SAN JOAQUIN VALLEY PULMONARY
5801 TRUXTUN AVE, BAKERSFIELD CA 933309

MARK	ISSUED FOR	DATE
△	OWNER CD & GA SUBMITTAL	08/15/19
△	BIDDING	08/23/19
△		
△		
△		
△		
△		

Project No.: 05-1-19504

ENALRGED DIMENSION FLOOR PLAN

A2.02

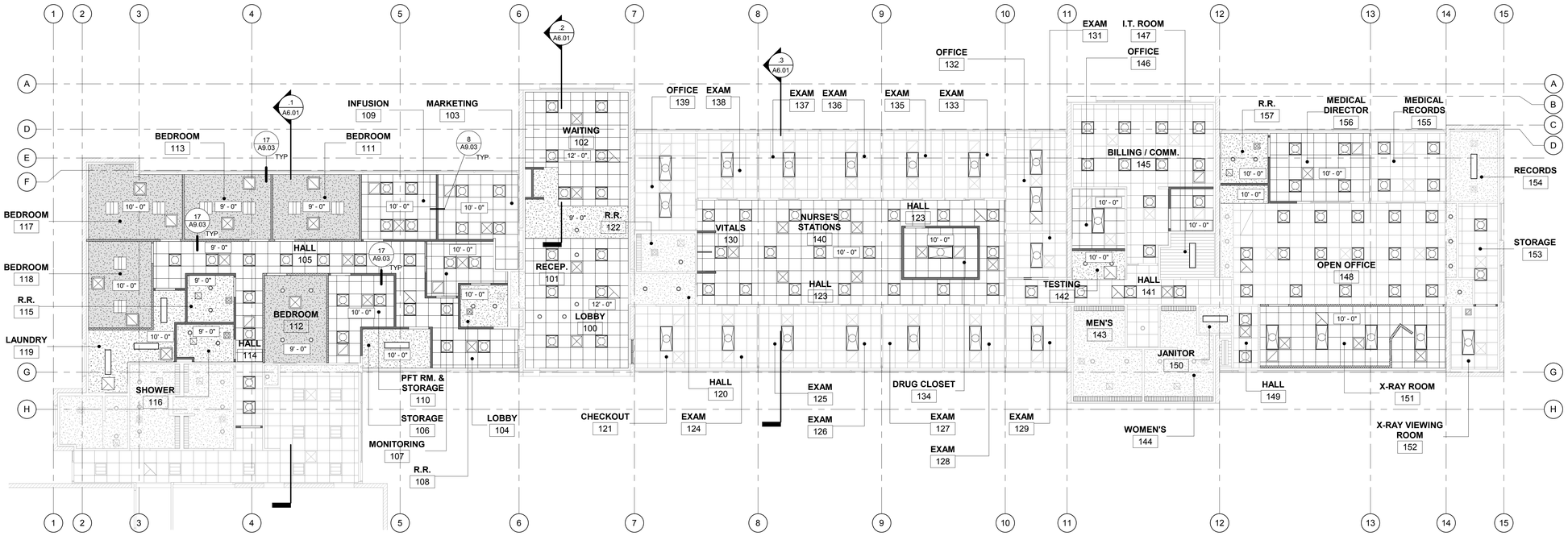

REFLECTED CEILING PLAN

1/8" = 1'-0"

GRAPHIC SCALE 0 8 16 24

WORKING NORTH

TRUE NORTH

INTERIOR ELEVATION KEY

KEYNOTES

KEY NO.	DESCRIPTION

REFLECTED CEILING LEGEND

NOTE: ALL ITEMS INDICATED ON THIS LIST MAY NOT NECESSARILY OCCUR ON THIS SHEET.

- X' - X" — CEILING HEIGHT
- (E) 2X2 SUSPENDED ACOUSTICAL CEILING SYSTEM
- (N) 2X2 SUSPENDED ACOUSTICAL CEILING SYSTEM
- (E) GYPSUM BOARD CEILING / SOFFIT
- (N) 6"x18ga CEILING JOST @ 16"o.c. w/ 5/8" GYPSUM BOARD CEILING / SOFFIT
- (N) 6"x18ga CEILING JOST @ 16"o.c. w/ 5/8" GYPSUM BOARD CEILING w/ SOUND INSULATION
- (E) EXPOSED STEEL ROOF-DECKING
- CEILING MOUNTED EXIT SIGN - REFER TO ELECTRICAL DRAWINGS FOR ADDITIONAL INFORMATION
- CEILING MOUNTED DIRECTIONAL EXIT SIGN - REFER TO ELECTRICAL DRAWINGS FOR ADDITIONAL INFORMATION
- RECESSED LIGHT FIXTURE - REFER TO ELECTRICAL DRAWINGS FOR ADDITIONAL INFORMATION
- SURFACE MOUNTED LIGHT FIXTURE - REFER TO ELECTRICAL DRAWINGS FOR ADDITIONAL INFORMATION.
- CHAIN MOUNTED LIGHT FIXTURE - REFER TO ELECTRICAL DRAWINGS FOR ADDITIONAL INFORMATION.
- EMERGENCY LIGHT - REFER TO ELECTRICAL DRAWINGS FOR ADDITIONAL INFORMATION.
- AIR TERMINAL - REFER TO MECHANICAL DRAWINGS FOR ADDITIONAL INFORMATION.

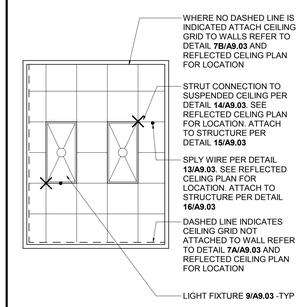

Klassen corporation
Architecture Construction
2021 Westwind Drive
Bakersfield, CA 93301
(661) 324-3000
(661) 324-3900 Fax
www.klassencorp.com

LICENSED ARCHITECT EDGAR L. CRUZADO C14520 REN 9-30-19 STATE OF CALIFORNIA

The above drawings and specifications and ideas, designs and arrangements represented thereby are and shall remain the property of the architect and no part thereof shall be copied, disclosed to others or used in connection with any work other than the specific project for which they have been prepared and developed without the written consent of the architect. Visual contact with these drawings or specifications shall constitute conclusive evidence of acceptance of these restrictions.

Written dimensions on these drawings shall have precedence over scaled dimension; contractors shall verify and be responsible for, all dimensions and conditions on the job and this office must be notified of any variation from the dimensions and conditions shown by these drawings. Shop details must be submitted to this office for approval before proceeding with fabrication.

TENANT IMPROVEMENTS
SAN JOAQUIN VALLEY PULMONARY
5801 TRUXTUN AVE, BAKERSFIELD CA 933309

MARK	ISSUED FOR	DATE
1	OWNER CD & GA SUBMITTAL	08/15/19
2	BIDDING	08/23/19
3		
4		
5		
6		
7		
8		

Project No.: 05-1-19504

REFLECTED CEILING PLAN & ENLARGED ROOF PLANS

A3.01

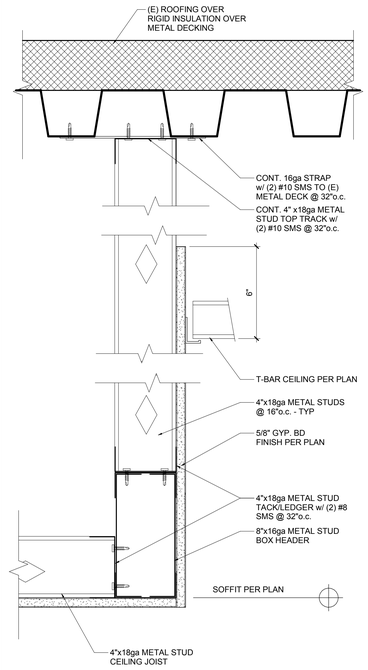

7 SOFFIT FRAMING 3" = 1'-0"

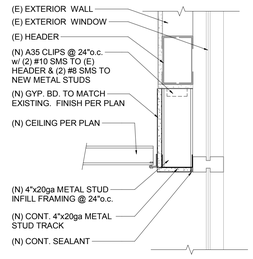

2 NEW CEILING @ (E) WINDOW MULLION 1 1/2" = 1'-0"

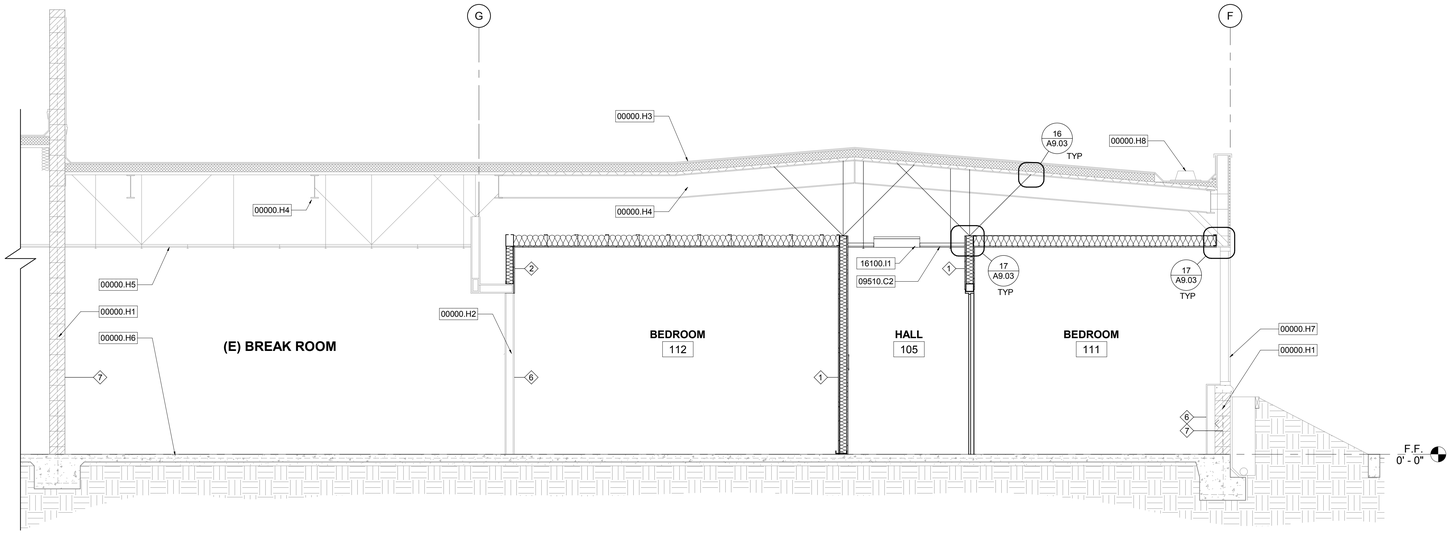

Section 1

3/8" = 1'-0"

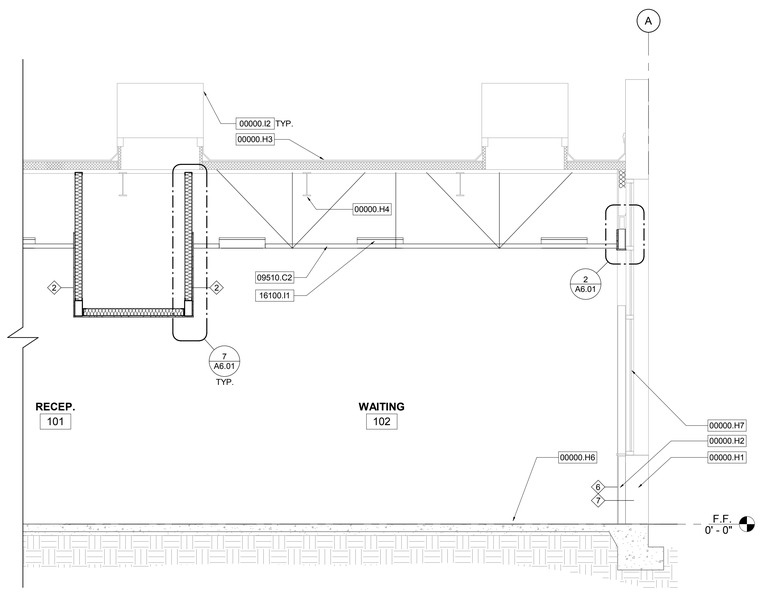

Section 2

3/8" = 1'-0"

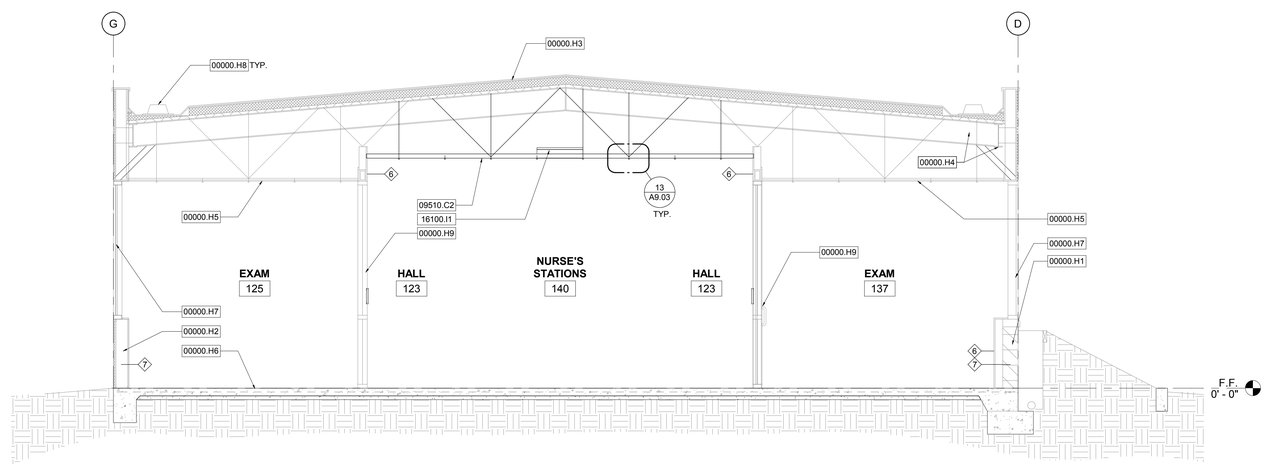

Section 3

3/8" = 1'-0"

BUILDING SECTIONS

GRAPHIC SCALE
0 8 16 24

KEYNOTES

KEY NO.	DESCRIPTION
00000.H1	(E) CMU WALL
00000.H2	(E) METAL STUD WALL
00000.H3	(E) ROOFING SYSTEM
00000.H4	(E) ROOF FRAMING
00000.H5	(E) SUSPENDED CEILING SYSTEM
00000.H6	(E) CONCRETE SLAB
00000.H7	(E) WINDOW SYSTEM
00000.H8	(E) ROOF DRAIN
00000.H9	(E) DOOR
00000.I2	(E) MECHANICAL EQUIPMENT
09510.C2	2' x 2' SUSPENDED T-BAR CEILING w/ FLUSH LAY-IN PANEL
16100.I1	LIGHT FIXTURE, REFER TO ELECTRICAL PLANS

PLAN LEGEND

NOTE: ALL ITEMS INDICATED ON THIS LIST MAY NOT NECESSARILY OCCUR ON THIS SHEET.

1. (N) 4" METAL STUDS AT 16" O.C. WITH 5/8" GYP BD ON SLEEP ROOM SIDE AND SOUND CLIPS WITH 5/8" GYP BD ON OPPOSITE SIDE. FULL HEIGHT TO 6" ABOVE CEILING LINE (SEE 7/A9.02 FOR ASSEMBLY)
2. (N) 4" METAL STUD WALL @ 16" O.C. WITH (N) 5/8" GYP. BD. EACH SIDE. GYP. BD. REQUIRED ONE SIDE ONLY @ FURRED WALLS. PROVIDE GREEN BD. IN WET AREAS.
3. (N) 2" METAL STUD WALL @ 16" O.C. WITH (N) 5/8" GYP. BD. EACH SIDE. GYP. BD. REQUIRED ONE SIDE ONLY @ FURRED WALLS. PROVIDE GREEN BD. IN WET AREAS.
4. (N) 4" METAL STUD WALL @ 16" O.C. WITH (N) 5/8" LEAD-LINED GYP. BD. ON X-RAY ROOM SIDE. (N) REGULAR 5/8" GYP. BD. @ OPPOSITE SIDE. REGULAR 5/8" GYP. BD. NOT REQUIRED @ FURRED WALLS. (SEE 5/A9.03 FOR INSTALLATION).
5. (E) METAL STUD WALL @ 16" O.C. WITH (N) 5/8" LEAD-LINED GYP. BD. ON X-RAY ROOM SIDE.
6. (E) METAL STUD WALL @ 16" O.C.
7. (E) CMU WALL

TYPICAL CONC. SLAB PATCH PER 24/A9.04

Klassen corporation
Architecture Construction
2021 Westwind Drive
Bakersfield, CA 93301
(661) 324-3000
(661) 324-3900 Fax
www.klassencorp.com

LICENSED ARCHITECT EDGAR L. CRUZ C14520 REN. 9-30-19 STATE OF CALIFORNIA

The above drawings and specifications and ideas, designs and arrangements represented thereby are and shall remain the property of the architect and no part thereof shall be copied, disclosed to others or used in connection with any work other than the specific project for which they have been prepared and developed without the written consent of the architect. Visual contact with these drawings or specifications shall constitute conclusive evidence of acceptance of these restrictions.

Written dimensions on these drawings shall have precedence over scaled dimension; contractors shall verify and be responsible for, all dimensions and conditions on the job and this office must be notified of any variation from the dimensions and conditions shown by these drawings. Shop details must be submitted to this office for approval before proceeding with fabrication.

TENANT IMPROVEMENTS
SAN JOAQUIN VALLEY PULMONARY
5801 TRUXTUN AVE, BAKERSFIELD CA 933309

MARK	ISSUED FOR	DATE
	OWNER CD & GA SUBMITTAL	08/15/19
	BIDDING	08/23/19

Project No. : 05-1-19504

BUILDING SECTIONS

A6.01

INTERIOR ROOM FINISH SCHEDULE

NO.	ROOM NAME	FLOOR FIN.	BASE FIN.	WALL 1 FIN.	WALL 2 FIN.	WALL 3 FIN.	WALL4 FIN.	CEILING FIN.	CABINETRY	COUNTERTOP	COMMENTS
100	LOBBY	CT-1	RB-2	P-1	P-1	P-1	P-1	ACT-1			
101	RECEP.	CT-1	RB-2	P-1	P-1	P-1	P-1	ACT-1 / HLC-1	PL-1	PL-2	
102	WAITING	CT-1	RB-2	P-1	P-1	P-1	P-1	ACT-1 / HLC-1			
103	MARKETING	VCT-1	RB-1	P-1	P-1	P-1	P-1	ACT-1			
104	LOBBY	VCT-1	RB-1	P-1	P-1	P-1	P-1	ACT-1			
105	HALL	VCT-1	RB-1	P-1	P-1	P-1	P-1	ACT-1			
106	STORAGE	VCT-1	RB-1	P-1	P-1	P-1	P-1	HLC-1			
107	MONITORING	VCT-1	RB-1	P-1	P-1	P-1	P-1	ACT-1		PL-2	
108	R.R.	CT-2	TB-1	WT-1 / P-1	WT-1 / P-1	WT-1 / P-1	WT-1 / P-1	HLC-1			TILE HT. 4'-6" WHERE OCCURS
109	INFUSION	SV-1	SVB-1	P-1	P-1	P-1	P-1	ACT-1			
110	PFT RM. & STORAGE	VCT-1	RB-1	P-1	P-1	P-1	P-1	HLC-1			
111	BEDROOM	SV-1	SVB-1	P-1	P-1	P-1	P-1	HLC-1			
112	BEDROOM	SV-1	SVB-1	P-1	P-1	P-1	P-1	HLC-1			
113	BEDROOM	VCT-1	SVB-1	P-1	P-1	P-1	P-1	HLC-1			
114	HALL	VCT-1	RB-1	P-1	P-1	P-1	P-1	ACT-1			
115	R.R.	CT-2	TB-1	WT-1 / P-1	WT-1 / P-1	WT-1 / P-1	WT-1 / P-1	HLC-1			TILE HT. 4'-6" WHERE OCCURS
116	SHOWER	CT-2	TB-1	WT-1 / P-1	WT-1 / P-1	WT-1 / P-1	P-1	HLC-1			TILE HT. 4'-6" WHERE OCCURS
117	BEDROOM	SV-1	SVB-1	P-1	P-1	P-1	P-1	HLC-1			
118	BEDROOM	SV-1	SVB-1	P-1	P-1	P-1	P-1	HLC-1			
119	LAUNDRY	VCT-1	RB-1	P-1	P-1	P-1	P-1	HLC-1		PL-2	
120	HALL	CT-1	RB-2	P-1	P-1	P-1	P-1	(E)			
121	CHECKOUT	VCT-1	RB-1	P-1	P-1	P-1	P-1	(E)	PL-1	PL-2	
122	R.R.	CT-2	TB-1	WT-1 / P-1	WT-1 / P-1	WT-1 / P-1	WT-1 / P-1	(E)			TILE HT. 4'-6" WHERE OCCURS
123	HALL	SV-1	SVB-1	P-1	P-1	P-1	P-1	ACT-1			
124	EXAM	SV-1	SVB-1	P-1	P-1	P-1	P-1	(E)	PL-1	PL-2	
125	EXAM	SV-1	SVB-1	P-1	P-1	P-1	P-1	(E)	PL-1	PL-2	
126	EXAM	SV-1	SVB-1	P-1	P-1	P-1	P-1	(E)	PL-1	PL-2	
127	EXAM	SV-1	SVB-1	P-1	P-1	P-1	P-1	(E)	PL-1	PL-2	
128	EXAM	SV-1	SVB-1	P-1	P-1	P-1	P-1	(E)	PL-1	PL-2	
129	EXAM	SV-1	SVB-1	P-1	P-1	P-1	P-1	(E)	PL-1	PL-2	
130	VITALS	SV-1	SVB-1	P-1	P-1	P-1	P-1	ACT-1			
131	EXAM	SV-1	SVB-1	P-1	P-1	P-1	P-1	(E)	PL-1	PL-2	
132	OFFICE	CPT	RB-1	P-1	P-1	P-1	P-1	(E)			
133	EXAM	SV-1	SVB-1	P-1	P-1	P-1	P-1	(E)	PL-1	PL-2	
134	DRUG CLOSET	VCT-1	RB-1	P-1	P-1	P-1	P-1	ACT-1			
135	EXAM	SV-1	SVB-1	P-1	P-1	P-1	P-1	(E)	PL-1	PL-2	
136	EXAM	SV-1	SVB-1	P-1	P-1	P-1	P-1	(E)	PL-1	PL-2	
137	EXAM	SV-1	SVB-1	P-1	P-1	P-1	P-1	(E)	PL-1	PL-2	
138	EXAM	SV-1	SVB-1	P-1	P-1	P-1	P-1	(E)	PL-1	PL-2	
139	OFFICE	CPT	RB-1	P-1	P-1	P-1	P-1	(E)			
140	NURSE'S STATIONS	SV-1	SVB-1	P-1	P-1	P-1	P-1	ACT-1	PL-1	PL-2	
141	HALL	SV-1	SVB-1	P-1	P-1	P-1	P-1	(E)			
142	TESTING	SV-1	SVB-1	P-1	P-1	P-1	P-1	HLC-1	PL-1	PL-2	
143	MEN'S	(E)	(E)	(E)	(E)	(E)	(E)	(E)			
144	WOMEN'S	(E)	(E)	(E)	(E)	(E)	(E)	(E)			
145	BILLING / COMM.	(E)	RB-1	P-1	P-1	P-1	P-1	(E)			
146	OFFICE	(E)	RB-1	P-1	P-1	P-1	P-1	ACT-1			
147	I.T. ROOM	(E)	(E)	(E)	(E)	(E)	(E)	(E)			
148	OPEN OFFICE	CPT	RB-1	P-1	P-1	P-1	P-1	ACT-1 / HLC-1	PL-1	PL-2	
149	HALL	SV-1	SVB-1	P-1	P-1	P-1	P-1	(E)			
150	JANITOR	(E)	(E)	(E)	(E)	(E)	(E)	(E)			
151	X-RAY ROOM	SV-1	SVB-1	P-1	P-1	P-1	P-1	ACT-1	PL-1	PL-2	
152	X-RAY VIEWING ROOM	(E)	(E)	(E)	(E)	(E)	(E)	(E)			
153	STORAGE	VCT-1	RB-1	P-1	P-1	P-1	P-1	(E)			
154	RECORDS	VCT-1	RB-1	P-1	P-1	P-1	P-1	(E)			
155	MEDICAL RECORDS	VCT-1	RB-1	P-1	P-1	P-1	P-1	(E)			
156	MEDICAL DIRECTOR	CPT	RB-1	P-1	P-1	P-1	P-1	ACT-1			
157	R.R.	CT-2	TB-1	WT-1 / P-1	WT-1 / P-1	WT-1 / P-1	WT-1 / P-1	HLC-1			TILE HT. 4'-6" WHERE OCCURS
158	IT ROOM	SC-1	RB-1	P-1	P-1	P-1	P-1	ACT-1			

INTERIOR FINISH LEGEND

FLOORING

VCT-1 **VINYL COMP. TILE (12" X 12")**
MANUF.: ARMSTRONG EXCELON - (OR EQUAL)
STYLE: IMPERIAL TEXTURE(OR EQUAL)
COLOR: TBD

SV-1 **SHEET VINYL**
MANUF.: ARMSTRONG (OR EQUAL)
STYLE: DECOART POSSIBILITIES (OR EQUAL)
COLOR: TBD

CPT **CARPET**
MANUF.: MOHAWK GROUP (OR EQUAL)
STYLE: METAL CRAFT COLLECTION - BROADLOOM (OR EQUAL)
COLOR: TBD

CT-1 **CERAMIC TILE**
MANUF.: EMSER TILE (OR EQUAL)
STYLE: UPTOWN 24" X 24" (OR EQUAL)
COLOR: TBD
NOTE: GROUT: CBP - COLOR: TBD

CT-2 **CERAMIC TILE**
MANUF.: EMSER TILE (OR EQUAL)
STYLE: ZONE 2" X 2" MESH (OR EQUAL)
COLOR: TBD
NOTE: GROUT: CBP - COLOR: TBD

SC-1 **SEALED CONCRETE (NATURAL GRAY)**
COLOR: CLEAR

BASE

RB-1 **4" RUBBER TOPSET BASE**
BURKE FLOORING (OR EQUAL)
TYPE TP 4" UNI-COLOR (OR EQUAL)
COLOR:TBD

RB-2 **6" RUBBER TOPSET BASE**
BURKE FLOORING (OR EQUAL)
TYPE TP 6" UNI-COLOR (OR EQUAL)
COLOR: TBD

SVB-1 **SHEET VINYL BASE**
MANUF.: ARMSTRONG (OR EQUAL)
STYLE: DECOART POSSIBILITIES (OR EQUAL)
COLOR: TBD

TB-1 **COVED CERAMIC TILE BASE**
EMSER - LOGIC 6" X 6" (OR EQUAL)
COLOR: TBD
NOTE: PROVIDE CORNER 1" X 6" TRIM AS REQUIRED @ RESTROOMS, TYP.

WALLS

P-1 **PAINT - TBD**

P-2 **PAINT - TBD**

P-3 **PAINT - TBD**

WT-1 **WALL TILE (4" X 4") FIELD TILE**
EMSER - GROUP 2 & 3 (OR EQUAL)
SEMI-GLOSS / MATTE (TBD)
COLOR: TBD

WT-2 **WALL TILE (4" X 4") ACCENT BAND**
EMSER - GROUP 2 & 3 (OR EQUAL)
SEMI-GLOSS / MATTE (TBD)
COLOR: TBD

DOORS

WS **WOOD STAIN**
TO MATCH EXISTING (FIELD VERIFY)

CEILING FINISHES

ACT-1 **ACOUSTICAL CEILING TILE**
MANUF.: ARMSTRONG (OR EQUAL)
STYLE: CORTEGA - 9/16" BEVELED TEGULAR (OR EQUAL)
TILE SIZE: 24" X 24" X 5/8"
COLOR: TBD
NOTE: 9/16" SUSPENSION SYSTEM (SILHOUETTE 1/8")

HLC-1 **HARDLID GYP. BD. CEILING PAINTED**
COLOR: TBD

SURFACES

PL-1 **PLASTIC LAMINATE (CABINETRY)**
MANUF.: FORMICA (OR EQUAL)
SERIES: WOOD GRAINS (OR EQUAL)
COLOR: TBD

PL-2 **PLASTIC LAMINATE (COUNTERS)**
MANUF.: FORMICA (OR EQUAL)
SERIES: PATTERNS (OR EQUAL)
COLOR: TBD

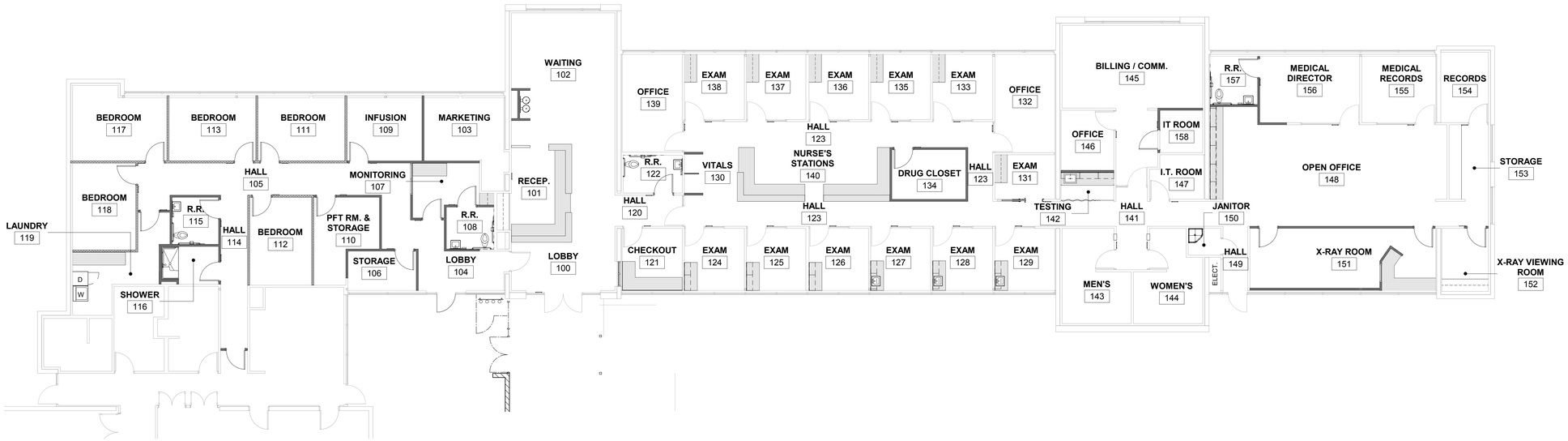

FINISH PLAN
1/8" = 1'-0"

GRAPHIC SCALE
0 8 16 24

WORKING NORTH

TRUE NORTH

INTERIOR ELEVATION KEY

Klassen corporation
Architecture Construction
2021 Westwind Drive
Bakersfield, CA 93301
(661) 324-3000
(661) 324-3900 Fax
www.klassencorp.com

LICENSED ARCHITECT EDGAR L. GRUBB C14520 REN 9-30-19 STATE OF CALIFORNIA

The above drawings and specifications and ideas, designs and arrangements represented thereby are and shall remain the property of the architect and no part thereof shall be copied, disclosed to others or used in connection with any work other or elsewhere than the specific project for which they have been prepared and developed without the written consent of the architect. Visual contact with these drawings or specifications shall constitute conclusive evidence of acceptance of these restrictions.

Written dimensions on these drawings shall have precedence over scaled dimension; contractors shall verify and be responsible for, all dimensions and conditions on the job and this office must be notified of any variation from the dimensions and conditions shown by these drawings. Shop details must be submitted to this office for approval before proceeding with fabrication.

TENANT IMPROVEMENTS
SAN JOAQUIN VALLEY PULMONARY
5801 TRUXTUN AVE, BAKERSFIELD CA 933309

MARK	ISSUED FOR	DATE
	OWNER CD & GA SUBMITTAL	08/15/19
	BIDDING	08/23/19

Project No. : 05-1-19504

FINISH SCHEDULE

A7.01

DOOR SCHEDULE (NEW)

NO.	TYPE	DOOR WIDTH	DOOR HEIGHT	DOOR THICKNESS	DOOR MATERIAL	DOOR FINISH	FIRE RATING	HARDWARE	FRAME MATERIAL	FRAME FINISH	FRAME JAMB DTL.	FRAME HEAD DTL.	COMMENTS
100	A	3' - 0"	8' - 10"	0' - 1 3/4"	WD	PFW	NA	01	STL	PF	11/A9.02	11/A9.02	
101	A	3' - 0"	8' - 10"	0' - 1 3/4"	WD	PFW	NA	02	STL	PF	10/A9.02	10/A9.02	
102	A	3' - 0"	8' - 10"	0' - 1 3/4"	WD	PFW	NA	02	STL	PF	10/A9.02	10/A9.02	
103	A	3' - 0"	8' - 10"	0' - 1 3/4"	WD	PFW	NA	03	STL	PF	11/A9.02	11/A9.02	
104	A	3' - 0"	8' - 10"	0' - 1 3/4"	WD	PFW	NA	04	STL	PF	11/A9.02	11/A9.02	
105	A	3' - 0"	8' - 10"	0' - 1 3/4"	WD	PFW	NA	04	STL	PF	11/A9.02	11/A9.02	
106	A	3' - 0"	8' - 10"	0' - 1 3/4"	WD	PFW	NA	02	STL	PF	10/A9.02	10/A9.02	
107	A	3' - 0"	8' - 10"	0' - 1 3/4"	WD	PFW	NA	02	STL	PF	10/A9.02	10/A9.02	
108	A	3' - 0"	8' - 10"	0' - 1 3/4"	WD	PFW	NA	02	STL	PF	10/A9.02	10/A9.02	
109	A	3' - 0"	8' - 10"	0' - 1 3/4"	WD	PFW	NA	01	STL	PF	11/A9.02	11/A9.02	
110	A	3' - 0"	8' - 10"	0' - 1 3/4"	WD	PFW	NA	15	STL	PF	11/A9.02	11/A9.02	Door to be equipped with security card access
111	A	3' - 0"	8' - 10"	0' - 1 3/4"	WD	PFW	NA	01	STL	PF	11/A9.02	11/A9.02	
112	A	3' - 0"	8' - 10"	0' - 1 3/4"	WD	PFW	NA	02	STL	PF	11/A9.02	11/A9.02	
113	A	3' - 0"	8' - 10"	0' - 1 3/4"	WD	PFW	NA	05	STL	PF	11/A9.02	11/A9.02	
114	B	3' - 0"	7' - 0"	0' - 1 3/4"	AL	PF	NA	06	AL	PF			
115	A	3' - 0"	8' - 10"	0' - 1 3/4"	WD	PFW	NA	15	STL	PF	11/A9.02	11/A9.02	Door to be equipped with security card access
116	C	3' - 8"	8' - 10"	0' - 1 3/4"	WD	PFW	NA	07	STL	PF	2/A9.03	1/A9.03	
117	D	3' - 0"	7' - 0"	0' - 1 3/4"	WD	PFW	NA	08	HM	PF	11/A9.02	11/A9.02	
118	D	3' - 0"	7' - 0"	0' - 1 3/4"	WD	PFW	NA	08	HM	PF	11/A9.02	11/A9.02	
119	A	3' - 0"	8' - 10"	0' - 1 3/4"	WD	PFW	NA	02	STL	PF	11/A9.02	11/A9.02	
120	A	3' - 0"	8' - 10"	0' - 1 3/4"	WD	PFW	NA	04	STL	PF	11/A9.02	11/A9.02	
121	A	3' - 0"	8' - 10"	0' - 1 3/4"	WD	PFW	NA	02	STL	PF	11/A9.02	11/A9.02	

DOOR SCHEDULE (EXISTING)

NO.	TYPE	DOOR WIDTH	DOOR HEIGHT	DOOR THICKNESS	DOOR MATERIAL	DOOR FINISH	FIRE RATING	HARDWARE	FRAME MATERIAL	FRAME FINISH	FRAME JAMB DTL.	FRAME HEAD DTL.	COMMENTS
200	(E)	3' - 0"	8' - 10"	0' - 1 3/4"	(E)	(E)	NA	09	(E)	(E)	(E)	(E)	Door to be equipped with security card access
201	(E)	6' - 0"	8' - 11"	0' - 1 3/4"	(E)	(E)	NA	10	(E)	(E)	(E)	(E)	Door to be equipped with security card access
203	(E)	3' - 0"	8' - 10"	0' - 1 3/4"	(E)	(E)	NA	10	(E)	(E)	(E)	(E)	
204	(E)	3' - 0"	8' - 10"	0' - 1 3/4"	(E)	(E)	NA	12	(E)	(E)	(E)	(E)	
205	(E)	3' - 0"	8' - 10"	0' - 1 3/4"	(E)	(E)	NA	09	(E)	(E)	(E)	(E)	Door to be equipped with security card access
206	(E)	3' - 0"	8' - 10"	0' - 1 3/4"	(E)	(E)	NA	10	(E)	(E)	(E)	(E)	
207	(E)	3' - 0"	8' - 10"	0' - 1 3/4"	(E)	(E)	NA	13	(E)	(E)	(E)	(E)	
208	(E)	3' - 0"	8' - 10"	0' - 1 3/4"	(E)	(E)	NA	10	(E)	(E)	(E)	(E)	
209	(E)	3' - 0"	8' - 10"	0' - 1 3/4"	(E)	(E)	NA	10	(E)	(E)	(E)	(E)	
210	(E)	3' - 0"	8' - 10"	0' - 1 3/4"	(E)	(E)	NA	10	(E)	(E)	(E)	(E)	
211	(E)	3' - 0"	8' - 10"	0' - 1 3/4"	(E)	(E)	NA	10	(E)	(E)	(E)	(E)	
212	(E)	3' - 0"	8' - 10"	0' - 1 3/4"	(E)	(E)	NA	10	(E)	(E)	(E)	(E)	
213	(E)	3' - 0"	8' - 10"	0' - 1 3/4"	(E)	(E)	NA	10	(E)	(E)	(E)	(E)	
214	(E)	3' - 0"	8' - 10"	0' - 1 3/4"	(E)	(E)	NA	10	(E)	(E)	(E)	(E)	
215	(E)	3' - 0"	8' - 10"	0' - 1 3/4"	(E)	(E)	NA	10	(E)	(E)	(E)	(E)	
216	(E)	3' - 0"	8' - 10"	0' - 1 3/4"	(E)	(E)	NA	10	(E)	(E)	(E)	(E)	
217	(E)	3' - 0"	8' - 10"	0' - 1 3/4"	(E)	(E)	NA	10	(E)	(E)	(E)	(E)	
218	(E)	3' - 0"	8' - 10"	0' - 1 3/4"	(E)	(E)	NA	10	(E)	(E)	(E)	(E)	
219	(E)	3' - 0"	8' - 10"	0' - 1 3/4"	(E)	(E)	NA	14	(E)	(E)	(E)	(E)	
220	(E)	3' - 0"	8' - 10"	0' - 1 3/4"	(E)	(E)	NA	14	(E)	(E)	(E)	(E)	
221	(E)	3' - 0"	8' - 10"	0' - 1 3/4"	(E)	(E)	NA	10	(E)	(E)	(E)	(E)	
222	(E)	3' - 0"	8' - 10"	0' - 1 3/4"	(E)	(E)	NA	10	(E)	(E)	(E)	(E)	
223	(E)	3' - 0"	8' - 10"	0' - 1 3/4"	(E)	(E)	NA	10	(E)	(E)	(E)	(E)	
225	(E)	3' - 0"	8' - 10"	0' - 1 3/4"	(E)	(E)	NA	10	(E)	(E)	(E)	(E)	Door to be equipped with security card access
227	(E)	3' - 0"	8' - 10"	0' - 1 3/4"	(E)	(E)	NA	10	(E)	(E)	(E)	(E)	
228	(E)	3' - 0"	8' - 10"	0' - 1 3/4"	(E)	(E)	NA	10	(E)	(E)	(E)	(E)	
229	(E)	3' - 0"	8' - 10"	0' - 1 3/4"	(E)	(E)	NA	10	(E)	(E)	(E)	(E)	
230	(E)	2' - 6"	7' - 0"	0' - 1 3/4"	(E)	(E)	NA	10	(E)	(E)	(E)	(E)	

WINDOW TYPES

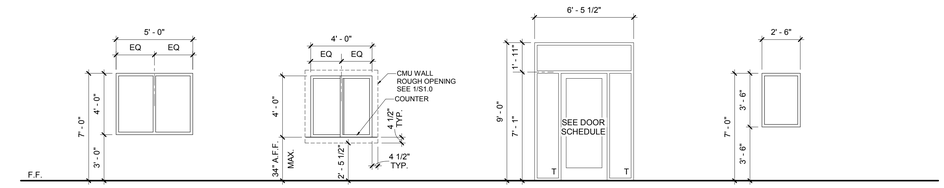

A CRL US ALUM STOREFRONTS SINGLE GLAZED WINDOW. FINISH TO MATCH EXISTING

B SLIDING ALUMINUM WINDOW SYSTEM ARCADIA MARK-1 SERIES OR EQ. APPROVED SEE 12/A9.03 FOR HEAD/SILL DETAIL

C CRL US ALUM STOREFRONTS: FF450 w/ TINTED GLAZING TO MATCH EXISTING (SEE 16/A9.02)

D LEAD LINED GLAZING SYSTEM w/ X-RAY PROTECTIVE LEAD GLASS MANUFACTURER: RAY-BAR ENGINEERING CORP. GLAZING: CLEAR

T = TEMPERED GLAZING

DOOR TYPES

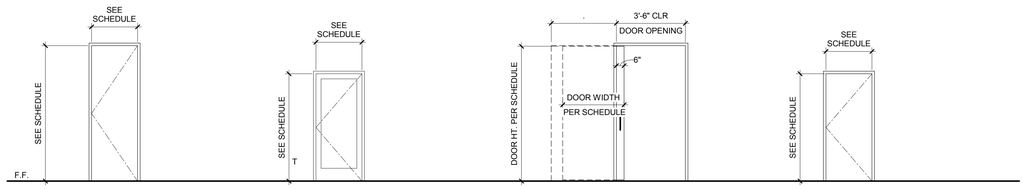

A **DOOR:** SC WOOD DOOR, FINISH TO MATCH (E) **FRAME:** TIMELY CLASSIC FRAME (C-SERIES) w/ TA-23 ALUMINUM CASING.

B CRL US ALUM STOREFRONTS: FF450 w/ TINTED GLAZING TO MATCH EXISTING (SEE 23/A9.02)

C **DOOR:** SC WOOD DOOR, FINISH TO MATCH (E) **FRAME:** TIMELY POCKET DOOR TRIM KIT (P-SERIES) w/ TA-23 ALUMINUM CASING. (SEE DETAIL 3/A9.03 FOR INVERTED STOP)

D **DOOR:** LEAD LINED SC WOOD DOOR, FINISH TO MATCH (E) MANUFACTURER: RAY-BAR ENGINEERING CORP. **FRAME:** HM FRAME

DOOR & FRAME NOTES

1. ALL LABELED DOORS SHALL HAVE APPROPRIATE CLOSER AND HARDWARE ASSEMBLIES AS REQUIRED BY DOOR LABELING AGENCY.
2. THE MAXIMUM EFFORT TO OPERATE DOORS SHALL BE AS FOLLOWS:
   A. INTERIOR DOORS = 5 LBS.
   B. EXTERIOR DOORS = 8 LBS.
   C. FIRE DOORS = 15 LBS. (MAX.)
3. ALL EXIT DOORS SHALL BE OPENABLE FROM THE INSIDE WITHOUT THE USE OF A KEY OR SPECIAL KNOWLEDGE OR EFFORT OR ABILITY TO GRASP THE OPENING HARDWARE.
4. ALL DOOR HARDWARE SHALL BE LEVER TYPE.
5. CONTRACTOR TO SUBMIT DOOR SIGNAGE SCHEDULE TO ARCHITECT FOR APPROVAL PRIOR TO FABRICATION.
6. ALL DOORS ARE 1-3/4" THICK UNLESS OTHERWISE NOTED.
7. IN ADDITION TO THE LOCATIONS INDICATED, PROVIDE TEMPERED GLASS IN THE FOLLOWING LOCATIONS:
   A. WITHIN A 24" RADIUS OF DOOR JAMBS;
   B. IN FIXED PANELS WHICH HAVE A GLAZED AREA IN EXCESS OF 9 S.F. AND THE LOWEST EDGE IS LESS THAN 18" ABOVE FINISHED FLOOR LEVEL.
8. VERIFY ALL STUD OPENINGS PRIOR TO FRAME FABRICATION AND INSTALLATION.
9. ALL PANIC HARDWARE DEVICES ARE TO BE INSTALLED AT 40" ABOVE FINISH FLOOR TO CENTER OF PAD.

ABBREVIATIONS

AL	=	ALUMINUM	PR	=	PAIR
AN	=	ANODIZED	SC	=	SOLID CORE
DBL	=	DOUBLE	STL	=	STEEL
HM	=	HOLLOW METAL	TG	=	TEMPERED GLASS
N	=	NO	WD	=	WOOD
P	=	PAINTED FINISH	Y	=	YES
PF	=	PREFINISHED	PFW	=	PREFINISHED WOOD (STAINED)

FINISH HARDWARE

PART 1 GENERAL

1.1 QUALITY ASSURANCE:

A. Hardware: New, free of defects, blemishes and excessive play. Obtain each kind of hardware (latch and locksets, exit devices, hinges and closers) from one manufacturer.

B. Exit Doors: Operable from inside with single motion without the use of a key or special knowledge or effort.

1.2 PROJECT CONDITIONS:

A. Where exact types of hardware specified are not adaptable to finished shape or size of members requiring hardware, provide suitable types having as nearly as practical as the same operation and quality as type specified, subject to Architect's approval.

B. Prior to submittal, carefully inspect existing conditions to verify finish hardware required to complete Work, including sized, quantities, and sill conditions material. If conflict between the scheduled material and existing conditions, submit request for directions from Architect. Include date of jobsite visit in the submittal.

PART 2 PRODUCTS

2.1 MANUFACTURERS:

A. Manufacturers and their abbreviations used in this schedule:

IVE H. B. Ives
LCN LCN Closers
SCH Schlage Lock Company
SCE Schlage Electronics
NGP National Guard Products
VON Von Duprin

2.2 KEYING REQUIREMENTS:

A. Key System: Existing Schlage keyway, non-interchangeable core typically with interchangeable core type operating cylinders for panic hardware. Key blanks available only from factory-direct sources, not available from after-market key blank manufacturers. For estimate use factory GMK charge. Initiate and conduct meetings(s) with Owner to determine system keyway(s) and structure, furnish Owner's written approval of the system.
   1. New master key system.
   2. Construction keying: furnish temporary keyed-alike cylinders/cores. Remove at substantial completion and install permanent cylinders/cores in Owner's presence. Demonstrate that construction key no longer operates.
   3. Temporary cylinders/cores remain Supplier's property.
   4. Furnish 10 construction keys.
   5. Furnish 2 construction control keys.

B. Key Cylinders: utility patented, 6-pin solid brass construction.

C. Cylinders/cores: keyed at factory of lock manufacturer where permanent records are maintained. Locks and cylinders same manufacturer.

D. Permanent keys: secured shipment direct from point of origination to Owner.
   1. For estimate: 3 keys per change combination, 5 master keys per group, 5 grand-master keys, 3 control keys.

E. Bitting List: Secured shipment direct from point of origination to Owners completion.

PART 3 EXECUTION

3.1 PREPARATION:

A. Locate hardware per SDI-100 and applicable building, fire, life-safety, accessibility, and security codes.
   1. Where new hardware is to be installed near existing doors/hardware scheduled to remain, match locations of existing hardware.

2.2 KEYING REQUIREMENTS:

A. Key System: Existing Schlage keyway, non-interchangeable core typically with interchangeable core type operating cylinders for panic hardware. Key blanks available only from factory-direct sources, not available from after-market key blank manufacturers. For estimate use factory GMK charge. Initiate and conduct meetings(s) with Owner to determine system keyway(s) and structure, furnish Owner's written approval of the system.
   1. New master key system.
   2. Construction keying: furnish temporary keyed-alike cylinders/cores. Remove at substantial completion and install permanent cylinders/cores in Owner's presence. Demonstrate that construction key no longer operates.
   3. Temporary cylinders/cores remain Supplier's property.
   4. Furnish 10 construction keys.
   5. Furnish 2 construction control keys.

B. Key Cylinders: utility patented, 6-pin solid brass construction.

C. Cylinders/cores: keyed at factory of lock manufacturer where permanent records are maintained. Locks and cylinders same manufacturer.

D. Permanent keys: secured shipment direct from point of origination to Owner.
   1. For estimate: 3 keys per change combination, 5 master keys per group, 5 grand-master keys, 3 control keys.

E. Bitting List: Secured shipment direct from point of origination to Owners completion.

PART 3 EXECUTION

3.1 PREPARATION:

A. Locate hardware per SDI-100 and applicable building, fire, life-safety, accessibility, and security codes.
   1. Where new hardware is to be installed near existing doors/hardware scheduled to remain, match locations of existing hardware.

B. Existing frames and doors scheduled to receive new hardware: carefully remove existing hardware, tag and bag, and turn over to Owner.
   1. Patch and fill wood frames and doors with solid wood stock or dowel material before cutting for new hardware. Do not reuse existing screw holes - - fill and re-pilot. Metal doors/frames: Weld or fasten with screws; filler pieces in existing hardware cut-outs and mortises not scheduled for re-use by new hardware. Leave surfaces smooth - - no applied patches.

3.2 INSTALLATION

A. Install hardware per manufacturer's instructions and recommendations. Do not install surface-mounted items until finishes have been completed on substrate. Set units level, plumb and true to line and location. Adjust and reinforce attachment substrate for proper installation and operation.
   1. Gaskets: install jamb-applied gaskets before closers, overhead stops, rim strikes, etc. Install sweeps across bottoms of doors before astragals, cope sweeps around bottom pivots, trim astragals to tops of sweeps.
   2. When hardware is to be attached to existing metal surface and insufficient reinforcement exists, use RivNuts, NutSerts or similar anchoring device for screws.

B. Locate floor stops not more than 4 inches from the wall.

3.3 ADJUSTING

A. Adjust and check for proper operation and function. Replace units, which cannot be adjusted to operate freely and smoothly.
Hardware damaged by improper installation or adjustment methods to be repaired or replaced to Owner's satisfaction.

3.4 PROTECTION/CLEANING:

A. Cover installed hardware, protect from paint, cleaning agents, weathering, carts/barrows, etc. Remove covering materials and clean hardware just prior to substantial completion.

3.5 SCHEDULE OF FINISH HARDWARE

A. See door schedule in drawings for hardware set assignments.

B. Miscellaneous Material:

1	EA	OPTION BOARD	900-4R		SCE
1	EA	POWER SUPPLY	PS906-4R		SCE

HW SET: 01

4	EA	HINGE	5BB1 4.5 X 4.5	652	IVE
1	EA	ENTRANCE LOCK	AL53PD SAT	626	SCH
1	EA	WALL STOP	WS401CCV	626	IVE
3	EA	SILENCER	SR65	GRY	IVE

HW SET: 02

4	EA	HINGE	5BB1 4.5 X 4.5	652	IVE
1	EA	OFFICE LOCK	AL50PD SAT	626	SCH
1	EA	WALL STOP	WS401CCV	626	IVE
3	EA	SILENCER	SR65	GRY	IVE

HW SET: 03

3	EA	HINGE	5BB1 4.5 X 4.5	652	IVE
1	EA	ELECTRIC HINGE	5BB1 4.5 X 4.5 TW8	652	IVE
1	EA	EU STOREROOM LOCK	ND80PDEU RHO RX	626	SCH
1	EA	SURFACE CLOSER	4031 EDA	689	LCN
1	EA	WALL STOP	WS401CCV	626	IVE
3	EA	SILENCER	SR65	GRY	IVE
1	EA	DOOR POSITION SWITCH	679-05 HM		SCE

DOORS NORMALLY CLOSED AND LOCKED. DOOR UNLOCKED BY VALID CARD READER OR PROGRAMMED TIME UNLOCK. FREE EGRESS AT ALL TIMES.

HW SET: 04

4	EA	HINGE	5BB1 4.5 X 4.5	652	IVE
1	EA	PRIVACY SET	AL40S SAT	626	SCH
1	EA	SURFACE CLOSER	4031	689	LCN
1	EA	WALL STOP	WS401CCV	626	IVE
3	EA	SILENCER	SR65	GRY	IVE

HW SET: 10

1		REKEY EXISTING CYLINDER			

HW SET: 11

1	EA	CLASSROOM LOCK	AL70PD SAT	626	SCH

BALANCE OF EXISTING HARDWARE TO REMAIN

HW SET: 12

1	EA	PRIVACY SET	AL40S SAT	626	SCH

BALANCE OF EXISTING HARDWARE TO REMAIN

HW SET: 13

1	EA	OFFICE LOCK	AL50PD SAT	626	SCH

BALANCE OF EXISTING HARDWARE TO REMAIN

HW SET: 14

EXISTING DOOR, FRAME AND HARDWARE TO REMAIN

HW SET: 15

3	EA	HINGE	5BB1 4.5 X 4.5	652	IVE
1	EA	ELECTRIC HINGE	5BB1 4.5 X 4.5 TW8	652	IVE
1	EA	EU STOREROOM LOCK	ND80PDEU RHO RX	626	SCH
1	EA	SURFACE CLOSER	4031	689	LCN
1	EA	WALL STOP	WS401CCV	626	IVE
3	EA	SILENCER	SR65	GRY	IVE
1	EA	DOOR POSITION SWITCH	679-05 HM		SCE

DOORS NORMALLY CLOSED AND LOCKED. DOOR UNLOCKED BY VALID CARD READER OR PROGRAMMED TIME UNLOCK. FREE EGRESS AT ALL TIMES.

HW SET: 05

4	EA	HINGE	5BB1 4.5 X 4.5	652	IVE
1	EA	PRIVACY SET	AL40S SAT	626	SCH
1	EA	SURFACE CLOSER	4031 EDA	689	LCN
1	EA	WALL STOP	WS401CCV	626	IVE
3	EA	SILENCER	SR65	GRY	IVE

HW SET: 06

1	EA	CONTINUOUS HINGE	112XY	628	IVE
1	EA	PANIC HARDWARE	35A-NL-OP	626	VON
1	EA	RIM CYLINDER	20-057-ICX (SPECIFY A, B OR C)	626	SCH
1	EA	CORE ONLY	23-030	626	SCH
1	EA	OFFSET DOOR PULL	8190HD-0	630	IVE
1	EA	SURFACE CLOSER	4111 EDA	689	LCN
1	EA	MOUNTING PLATE	4110-18	689	LCN
1	EA	FLOOR STOP	FS441	626	IVE
1	EA	DOOR SWEEP	200NA	CL	NGP
1	EA	THRESHOLD	613 MS/LA	AL	NGP

PERIMETER SEALS BY DOOR MANUFACTURER

HW SET: 07

2	EA	DOOR PULL	8102HD-8 MOUNTED BACK TO BACK	630	IVE

BALANCE OF HARDWARE BY FRAME MANUFACTURER

HW SET: 08

1	SET	PIVOT SET	7226	626	IVE
1	EA	PIVOT	7226 INT	626	IVE
1	EA	OFFICE LOCK	L9050P 06A L583-363 X XL11-515	626	SCH
1	EA	WALL STOP	WS401CCV	626	IVE
3	EA	SILENCER	SR64	GRY	IVE

HW SET: 09

1	EA	ELECTRIC HINGE	5BB1 4.5 X 4.5 TW8	652	IVE
1	EA	EU STOREROOM LOCK	L9092PEU-RX 06A	626	SCH
1	EA	DOOR POSITION SWITCH	679-05 HM		SCE

DOORS NORMALLY CLOSED AND LOCKED. DOOR UNLOCKED BY VALID CARD READER OR PROGRAMMED TIME UNLOCK. FREE EGRESS AT ALL TIMES.
CORE EXISTING DOOR FOR NEW ELECTRIC LOCK.
BALANCE OF EXISTING HARDWARE TO REMAIN

Klassen corporation
Architecture Construction
2021 Westwind Drive
Bakersfield, CA 93301
(661) 324-3000
(661) 324-3900 Fax
www.klassencorp.com

LICENSED ARCHITECT EDGAR L. CRUZADO C14520 REN 9-30-19 STATE OF CALIFORNIA

The above drawings and specifications and ideas, designs and arrangements represented thereby are and shall remain the property of the architect and no part thereof shall be copied, disclosed to others or used in connection with any work other than the specific project for which they have been prepared and developed without the written consent of the architect. Visual contact with these drawings or specifications shall constitute conclusive evidence of acceptance of these restrictions.

Written dimensions on these drawings shall have precedence over scaled dimension; contractors shall verify and be responsible for, all dimensions and conditions on the job and this office must be notified of any variation from the dimensions and conditions shown by these drawings. Shop details must be submitted to this office for approval before proceeding with fabrication.

TENANT IMPROVEMENTS
SAN JOAQUIN VALLEY PULMONARY
5801 TRUXTUN AVE, BAKERSFIELD CA 933309

DATE	ISSUED FOR	MARK
08/15/19	OWNER CD & GA SUBMITTAL	△
08/23/19	BIDDING	△

Project No. : 05-1-19504

DOOR & WINDOW SCHEDULES

A7.02

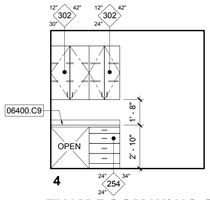

NOTE: APPLIES TO ALL EXAM ROOMS EXCEPT ROOM 127-129. SEE FLOOR PLAN FOR ORIENTATION OF CABINETRY.

EXAM ROOM W/ NO SINK
1/4" = 1'-0"

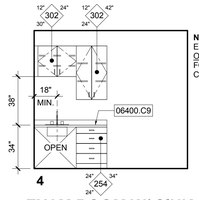

NOTE: APPLIES TO EXAM ROOMS 127-129 ONLY. SEE FLOOR PLAN FOR ORIENTATION OF CABINETRY.

EXAM ROOM W/ SINK
1/4" = 1'-0"

116 - SHOWER
1/4" = 1'-0"

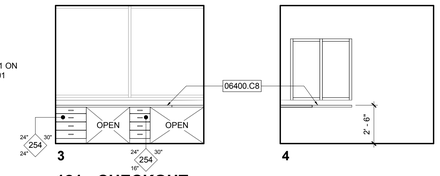

121 - CHECKOUT
1/4" = 1'-0"

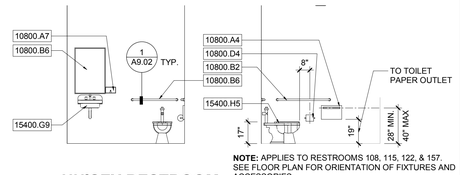

NOTE: APPLIES TO RESTROOMS 108, 115, 122, & 157. SEE FLOOR PLAN FOR ORIENTATION OF FIXTURES AND ACCESSORIES.

UNISEX RESTROOM
1/4" = 1'-0"

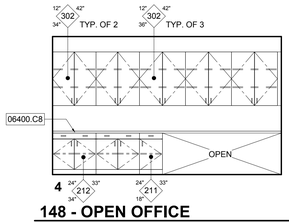

148 - OPEN OFFICE
1/4" = 1'-0"

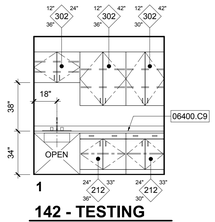

142 - TESTING
1/4" = 1'-0"

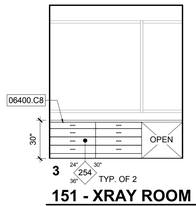

151 - XRAY ROOM
1/4" = 1'-0"

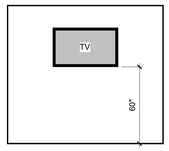

NOTE: APPLIES TO ALL SLEEP ROOMS. (ROOMS 111-113, 117, & 118). SEE FLOOR PLAN FOR ORIENTATION OF TELEVISION

BEDROOM
1/4" = 1'-0"

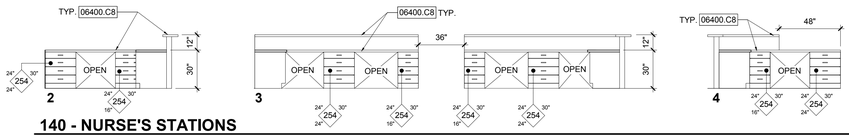

140 - NURSE'S STATIONS
1/4" = 1'-0"

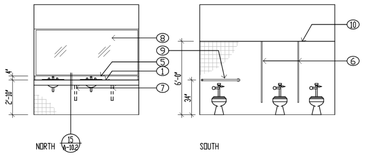

④ 112 WOMENS

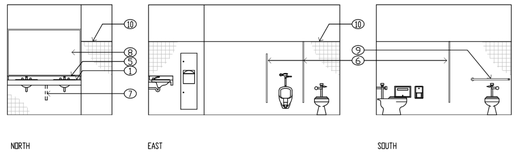

⑤ 115 MENS

NOTE:
EXISTING TOILET FACILITIES COMPLIANT WITH 2016 CBC 11B-505.4, 11B-505.5, 11B-505.6, 11B-505.7, 11B-505.8 AND CHAPTER 6.

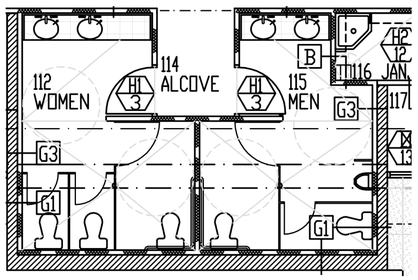

Existing RR
1/4" = 1'-0"

KEYNOTES

1 COUNTERTOP	18 ALCOVE FOR TELEVISION	33 UNDERCOUNTER LIGHTING
2 BASE CABINET	19 BENCH ATTACHED TO SUPPORTS IN WALL	34 RAISED FLOORING
3 UPPER CABINET	20 WHITE MARKER BOARD	35 FINISH END
4 FULL HEIGHT CABINET	21 LIMESTONE COUNTERTOP	36 CABINET VALENCE
5 6" SPLASH - UNO.	22 PENDANT LIGHTING	37 3" H. ALUM LETTERS W/ 12" SPACE BETWEEN
6 TOILET PARTITION	23 4" FLUSH WOOD BASE - PAINT, UNO.	38 SHOWER CURTAIN & ROD
7 METAL BRACING	24 FILE CABINETS (ALL) - VERIFY CLR. OPENG REQD.	39 FOLD-UP SEAT
8 MIRROR	25 SOFFIT	40 TOWEL & ROBE HOOKS
9 GRAB BAR	26 ACOUSTICAL WALL TREATMENT - VERIFY FABRIC SPECIFICATION	41 FIXED WOOD PANEL FINISHED TO MATCH DR.
10 TILE WAINSCOT	27 MAKEUP LIGHTING - SEE ELECTRICAL	42 FILLER TRIM - ALIGN W/ FILE CABINET
11 PUNCHED WINDOW	28 OPEN SPACE	43 MAGNETIC MARKER RAIL - 48" L.
12 CEILING TREATMENT	29 DISHWASHER	44 12"x12" WIRING ACCESS PANEL
13 WOOD VENEER (VERT. GRAIN)	30 UNDER COUNTER REFRIDGERATOR	45 CABINET DOORS ONLY, NO CABINET BASE OR TOEKICK
14 1/2" RP	31 VENDING MACHINE	46 EXTEND RETURN TO WALL
15 1/2" REVEAL - PAINT BLACK	32 MICROWAVE - VERIFY CLR. OPENG REQD.	
16 WOOD BOX FOR TV		
17 TV SUPPORTS		

NOTE:
IMAGES FOR EXISTING TOILET FACILITY PLAN, INTERIOR ELEVATION AND FINISHES FROM ORIGINAL PLANS ARE FOR CLARITY PURPOSES.

INTERIOR ELEVATIONS

GRAPHIC SCALE
0 4 8 12

KEYNOTES

KEY NO.	DESCRIPTION
06400.C8	LAMINATE PLASTIC COUNTERTOP, REFER TO FINISH SCHEDULE
06400.C9	LAMINATE PLASTIC COUNTERTOP w/ SPLASH, REFER TO FINISH SCHEDULE
10800.A4	TOILET SEAT COVER DISPENSER
10800.A7	SURFACE MOUNTED SOAP DISPENSER
10800.B2	GRAB BAR 48"L
10800.B6	STAINLESS STEEL MIRROR
10800.D4	SURFACE MOUNTED TOILET PAPER DISPENSER
15400.G9	LAVATORY, REFER TO PLUMBING PLANS
15400.H5	TOILET, REFER TO PLUMBING PLANS
15400.K3	ROLL-IN SHOWER

GENERAL NOTES

1. ALL CABINETS & DRAWERS TO BE LOCKABLE

SIGNAGE LEGEND

S1	BUILDING ENTRY ACCESSIBILITY (SIGN PER DETAIL 11/A9.01)
S2	EXIT (SIGN PER DETAIL 7/A9.01)
S3	EXIT ROUTE (SIGN PER DETAIL 7/A9.01)
S4	UNISEX TOILET ROOM (SIGN PER DETAIL 13/A9.01)
S5	EXISTING MEN'S TOILET RM. SIGN COMPLIANT w/ 13/A9.01)
S6	EXISTING WOMEN'S TOILET RM. SIGN COMPLIANT w/ 13/A9.01)
S7	ROOM NAME SIGN (SIGN PER DETAIL 11/A9.01)

Klassen corporation
Architecture Construction
2021 Westwind Drive
Bakersfield, CA 93301
(661) 324-3000
(661) 324-3900 Fax
www.klassencorp.com

LICENSED ARCHITECT EDGAR L. CRUZ C14520 REN 9.30.19 STATE OF CALIFORNIA

The above drawings and specifications and ideas, designs and arrangements represented thereby are and shall remain the property of the architect and no part thereof shall be copied, disclosed to others or used in connection with any work other than the specific project for which they have been prepared and developed without the written consent of the architect. Visual contact with these drawings or specifications shall constitute conclusive evidence of acceptance of these restrictions.

Written dimensions on these drawings shall have precedence over scaled dimension; contractors shall verify and be responsible for, all dimensions and conditions on the job and this office must be notified of any variation from the dimensions and conditions shown by these drawings. Shop details must be submitted to this office for approval before proceeding with fabrication.

TENANT IMPROVEMENTS
SAN JOAQUIN VALLEY PULMONARY
5801 TRUXTUN AVE, BAKERSFIELD CA 933309

MARK	ISSUED FOR	DATE
	OWNER CD & GA SUBMITTAL	08/15/19
	BIDDING	08/23/19

Project No.: 05-1-19504

INTERIOR ELEVATIONS

A8.01

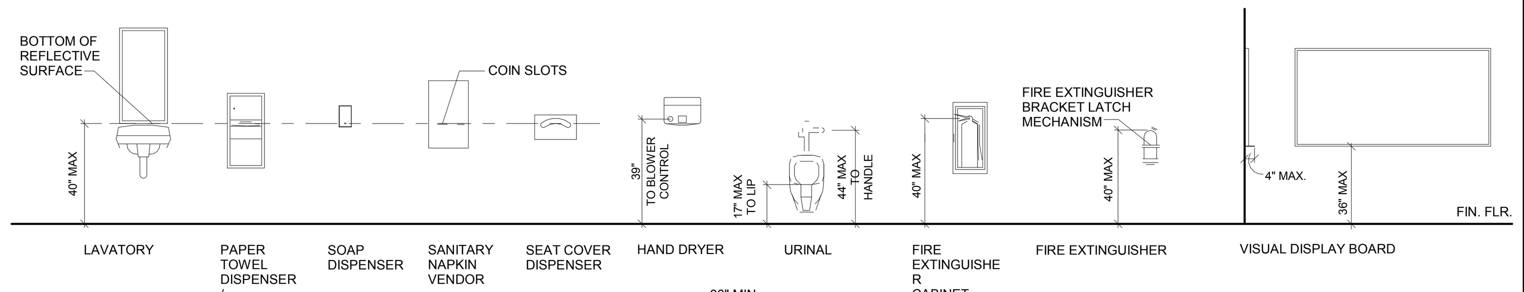

GENERAL NOTES:

1. NOT ALL FIXTURES/ACCESSORIES NECESSARILY OCCUR IN THIS PROJECT.
2. HEIGHTS NOTED ON INTERIOR ELEVATIONS GOVERN OVER THOSE SHOWN HERE.
3. THE ITEMS IN THIS DETAIL ARE SHOWN AT HEIGHTS ACCESSIBLE TO ADULT PERSONS WITH DISABILITIES.
4. WATER CLOSET FLUSH VALVE SHALL BE ORIENTED TO THE WIDE SIDE OF THE ROOM/STALL.
5. ELECTRICAL CONVENIENCE FLOOR OUTLETS ARE NOT SUBJECT TO MINIMUM HEIGHT REQUIREMENTS. **CBC 2016 11B-308.2 & 11B-205.1**

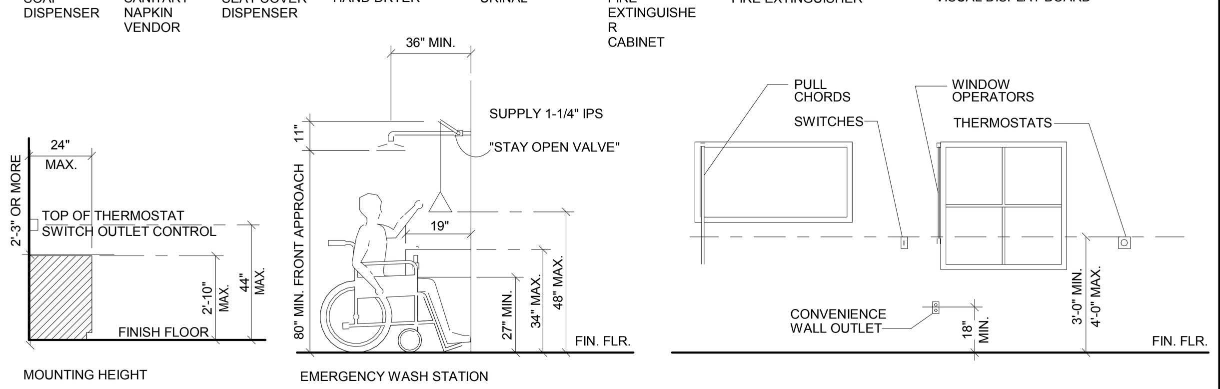

1 ACCESSIBLE MOUNTING HEIGHTS

N.T.S

NOTE:
CODE OF REFERENCE **2016 CBC 11B-502.6.4**

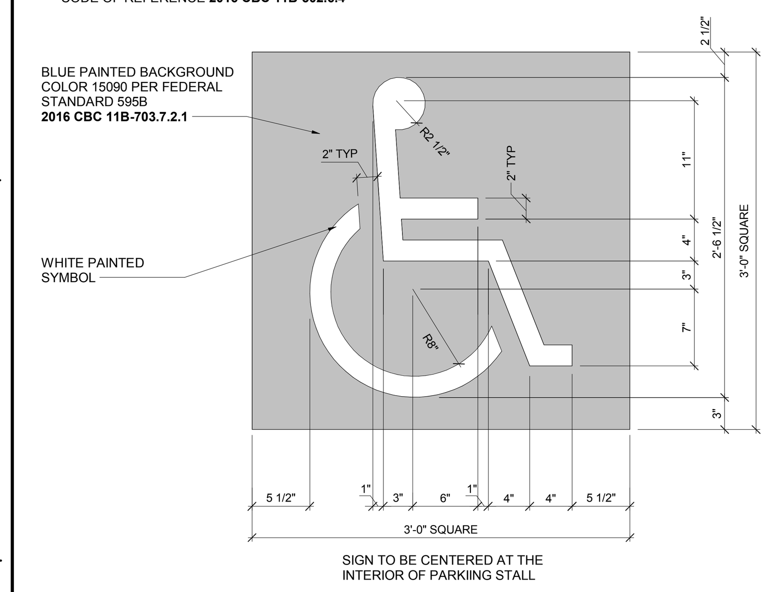

3 ACCESSIBLE SYMBOL

12" = 1'-0"

NOTES:
1. TOP LOADING MACHINES SHALL HAVE THE DOOR TO THE LAUNDRY COMPARTMENT LOCATED 36" MAX. A.F.F.

2. FRONT LOADING MACHINES SHALL HAVE THE BOTTOM OF THE OPENING TO THE LAUNDRY COMPARTMENT LOCATED 15" MIN. AND 36" MAX. A.F.F.

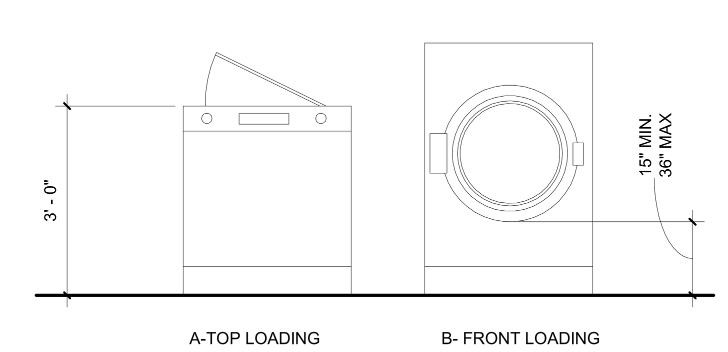

NOTE:
CODE OF REFERENCE **2016 CBC SECTION 11B-611.4**

4 LAUNDRY COMPARTMENT OPENING

1/2" = 1'-0"

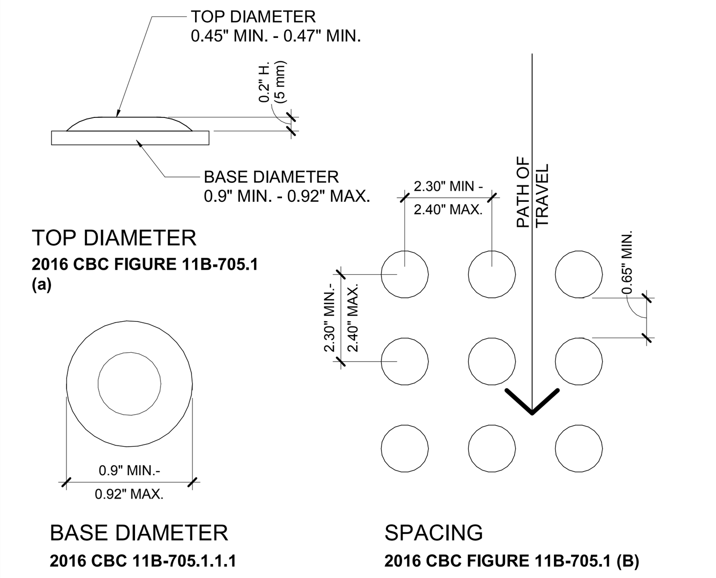

NOTE:
CODE OF REFERENCE **2016 CBC SECTION 11B-705**

5 DETECTABLE WARNING DOMES

N.T.S.

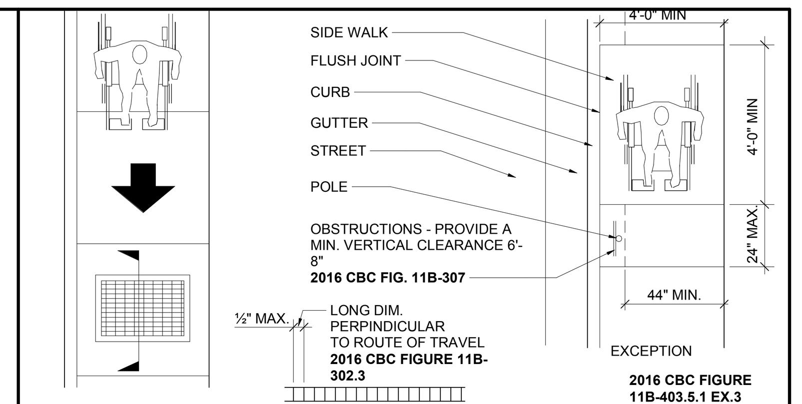

1. ACCESSIBILITY - PRIVATE WALKS AND SIDEWALKS ARE REQUIRED TO BE ACCESSIBLE IF THEY LEAD TO BUILDINGS AND FACILITIES REQUIRED TO BE ACCESSIBLE.
2. CHANGES IN LEVEL:
   A. ABRUPT CHANGES IN LEVEL EXCEEDING ¼ INCH ARE NOT ALLOWED **2016 CBC 11B-303.2**
   B. CHANGES IN LEVEL NOT EXCEEDING ¼ INCH MAY BE VERTICAL **2016 CBC 11B-303.2**
   C. CHANGES ¼ TO ½ INCH HIGH ARE REQUIRED TO BE BEVELED WITH A SLOPE NO GREATER THAN 1:2 HORIZONTAL **2016 CBC 11B-303.3**
   D. CHANGES IN LEVELS EXCEEDING 1/2 INCH MUST COMPLY WITH THE REQUIREMENTS FOR CURB RAMPS **2016 CBC 11B-303.4**
3. SURFACES: SLIP-RESISTANT **2016 CBC 11B-302.1** (WITH A MEDIUM SALT FINISH AS A MINIMUM STD.) - SLOPE SHALL BE NO STEEPER THAN 1:20 **2016 CBC 11B-403.3**
4. CROSS SLOPES - NOT STEEPER THAN 1:48 **2016 CBC 11B-403.3**
5. GRATINGS - GRID OPENINGS 1/2 MAX INCH OR LESS IN DIRECTION OF TRAFFIC FLOW **2016 CBC 11B-302.3**

6 SIDEWALKS & GRATINGS

N.T.S.

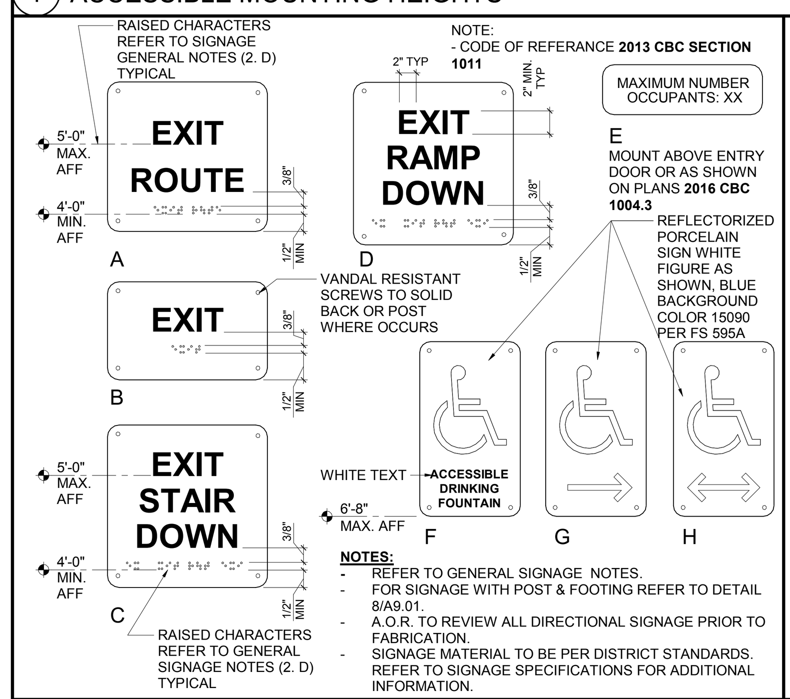

NOTES:
- REFER TO GENERAL SIGNAGE NOTES.
- FOR SIGNAGE WITH POST & FOOTING REFER TO DETAIL 8/A9.01.
- A.O.R. TO REVIEW ALL DIRECTIONAL SIGNAGE PRIOR TO FABRICATION.
- SIGNAGE MATERIAL TO BE PER DISTRICT STANDARDS. REFER TO SIGNAGE SPECIFICATIONS FOR ADDITIONAL INFORMATION.

7 EXIT & ROUTE SIGNAGE

N.T.S.

GENERAL NOTES:
(TYPICAL TO ALL SIGNS THIS DETAIL)

1. ALL SIGN SUBSTRATES SHALL BE 1/8" THICK ALUMINUM.
2. LETTERS AND GRAPHICS SHALL BE SILK SCREENED REFLECTORIZED ALUMINUM.
3. ALL SIGNS SHALL BE MOUNTED w/ TAMPER PROOF SCREWS TO GALVANIZED TS 2 x 2 x 3/16. TUBE SHALL BE SHOP PRIMED AND PAINTED w/ 2 COATS OF EXTERIOR ENAMEL.
4. IN LIEU OF TAMPER PROOF SCREWS, SPOT WELDING END OF BOLT AFTER NUT INSTALLATION IS ACCEPTABLE.
5. SIGNAGE MATERIAL TO BE PER DISTRICT STANDARDS. REFER TO SIGNAGE SPECIFICATIONS FOR ADDITIONAL INFORMATION

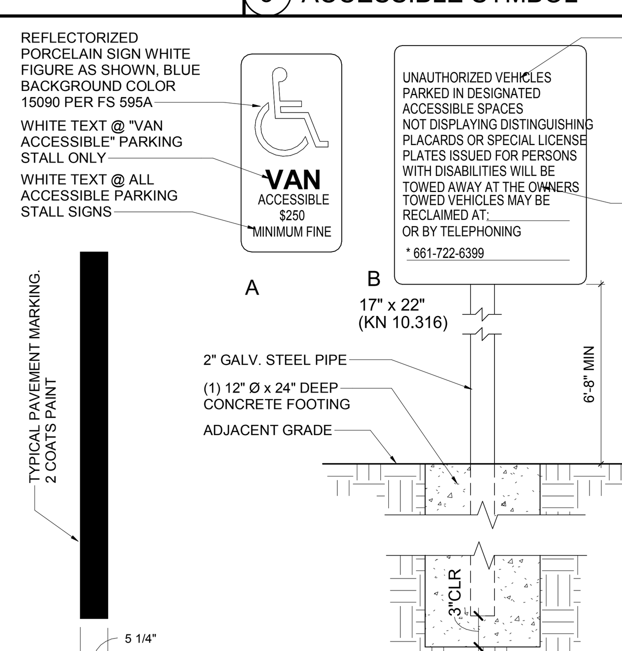

REFLECTORIZED PORCELAIN SIGN 1" HIGH WHITE TEXT AS SHOWN, BLUE BACKGROUND COLOR 15090 PER FS 595B CONTRACTOR TO VERIFY ALL INFORMATION SHOWN ON SIGN INCLUDING ADDRESS AND PHONE PRIOR TO PRINTING. ALL PRINTING TO BE PERMANENTLY AFFIXED. CONFIRM INFORMATION SHOWN w/ ASTERISKS (*) WITH OWNER PRIOR TO FABRICATION

AN ADDITIONAL TOW-A-WAY SIGN SHALL ALSO BE POSTED IN A CONSPICUOUS PLACE, AT EACH ENTRANCE TO THE OFF-STREET PARKING FACILITIES, OR IMMEDIATELY ADJACENT TO AND VISIBLE FROM EACH STALL OR SPACE. THE SIGN SHALL BE NOT LESS THAN 17 INCHES BY 22 INCHES IN SIZE WITH LETTERING NOT LESS THAN 1 INCH IN HEIGHT, WHICH CLEARLY AND CONSPICUOUSLY STATES THE FOLLOWING : (**)

8 SITE SIGNAGE

N.T.S.

1. WHERE A TACTILE SIGN IS PROVIDED AT A DOOR, THE SIGN SHALL BE LOCATED ALONGSIDE THE DOOR AT THE LATCH SIDE. WHERE A TACTILE SIGN IS PROVIDED AT DOUBLE DOORS WITH ONE ACTIVE LEAF, THE SIGN SHALL BE LOCATED TO THE RIGHT HAND DOOR. WHERE THERE IS NO WALL SPACE AT THE LATCH SIDE OF DOUBLE DOORS, SIGNS SHALL BE LOCATED ON THE NEAREST ADJACENT WALL. SIGNS CONTAINING TACTILE CHARACTERS SHALL BE LOCATED SO THAT A CLEAR FLOOR SPACE OF 18 INCHES MINIMUM BY 18 INCHES MINIMUM, CENTERED ON THE TACTILE CHARACTERS, IS PROVIDED BEYOND THE ARC OF ANY SWING BETWEEN THE CLOSED POSITION AND 45 DEGREES OPEN POSITION. WHERE PERMANENT IDENTIFICATION SIGNAGE IS PROVIDED FOR ROOMS AND SPACES THEY SHALL BE LOCATED ON THE APPROACH SIDE OF THE DOOR AS ONE ENTERS THE ROOM OR SPACE. SIGNS THAT IDENTIFY EXITS SHALL BE LOCATED ON THE APPROACH SIDE OF THE DOOR AS ONE EXITS THE ROOM OR SPACE. **2016 CBC 11B-703.4.2**
2. RAISED CHARACTERS SHALL CONFORM TO **2016 CBC 11B-703.2,** INCLUDING, BUT NOT LIMITED TO THE FOLLOWING:
   A. LETTERS AND NUMBERS ON SIGNS SHALL BE RAISED 1/32" MINIMUM ABOVE BACKGROUND **2016 CBC 11B-703.2.1** AND SHALL BE SANS-SERIF UPPERCASE CHARACTERS **2016 CBC 11B-703.2.2** ACCOMPANIED BY GRADE 2 BRAILLE. BRAILLE SHALL COMPLY WITH **2016 CBC 11B-703.3.**
   B. CHARACTER HEIGHT MEASURED VERTICALLY FROM THE BASELINE OF THE CHARACTER SHALL BE 5/8 INCH MINIMUM AND 2 INCHES MAXIMUM BASED ON THE HEIGHT OF THE UPPERCASE LETTER "T" **2016 CBC 11B-703.2.5**
   C. STROKE THICKNESS OF THE UPPERCASE LETTER "I" SHALL BE 15 PERCENT MAXIMUM OF THE HEIGHT OF THE CHARACTER. **2016 CBC 11B-703.2.6**
   D. TACTILE CHARACTERS ON SIGNS SHALL BE LOCATED 48 INCHES MINIMUM ABOVE THE FINISH FLOOR OR GROUND SURFACE MEASURED FROM BASELINE OF THE LOWEST BRAILLE CELLS AND 60 INCHES MAXIMUM ABOVE THE FINISH FLOOR OR GROUND SURFACE, MEASURED FROM THE BASELINE OF THE HIGHEST LINE OF RAISED CHARACTERS. **2016 CBC 11B-703.4.1**
3. THE INTERNATIONAL SYMBOL OF ACCESSIBILITY SHALL BE THE STANDARD USED TO IDENTIFY FACILITIES THAT ARE ACCESSIBLE TO AND USABLE BY PHYSICALLY DISABLED PERSONS.
4. THE INTERNATIONAL SYMBOL OF ACCESSIBILITY SHALL CONSIST OF A WHITE FIGURE ON A BLUE BACKGROUND. THE BLUE SHALL BE EQUAL TO COLOR NO. 15090 IN FEDERAL STANDARDS 595C. **2016 CBC 11B-703.7.2.1**
5. FINISH AND CONTRAST. CHARACTERS AND THEIR BACKGROUND SHALL HAVE A NON - GLARE FINISH. CHARACTERS SHALL CONTRAST WITH THEIR BACKGROUND WITH EITHER LIGHT CHARACTERS ON A DARK BACKGROUND OR DARK CHARACTERS ON LIGHT BACKGROUND **2016 CBC 11B-703.5.1 & 11B-703.7.1**

10 GENERAL SIGNAGE NOTES

N.T.S.

A - ISA SYMBOL AT MAIN ENTRY DOORS

B - ROOM IDENTIFICATION

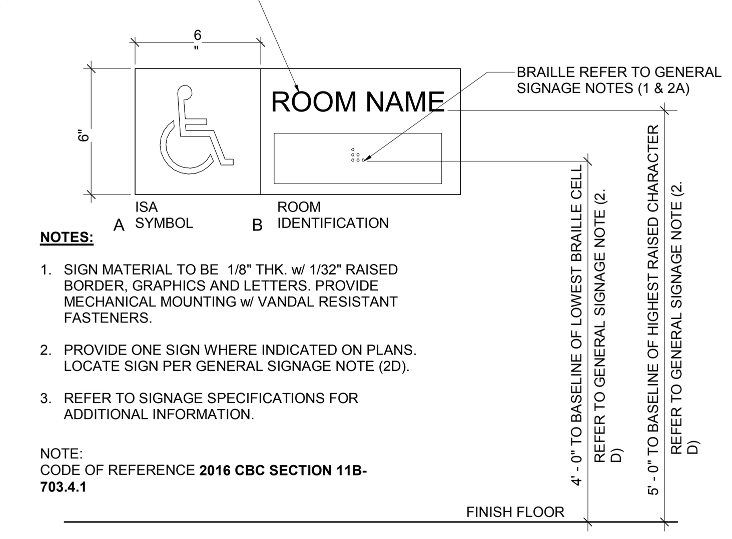

NOTES:

1. SIGN MATERIAL TO BE 1/8" THK. w/ 1/32" RAISED BORDER, GRAPHICS AND LETTERS. PROVIDE MECHANICAL MOUNTING w/ VANDAL RESISTANT FASTENERS.
2. PROVIDE ONE SIGN WHERE INDICATED ON PLANS. LOCATE SIGN PER GENERAL SIGNAGE NOTE (2D).
3. REFER TO SIGNAGE SPECIFICATIONS FOR ADDITIONAL INFORMATION.

NOTE:
CODE OF REFERENCE **2016 CBC SECTION 11B-703.4.1**

GENERAL SIGNAGE NOTES PER 10/A9.01

11 ENTRY DOOR SIGN

N.T.S.

GENERAL NOTES:
(TYPICAL TO ALL SIGNS THIS DETAIL)

1. ALL SIGNS TO BE 1/4" THICK.
2. ALL SYMBOLS AND LETTERS TO BE RAISED MIN. 1/32" ABOVE SIGN SURFACE TYPICAL. FOR SIGNS ADJACENT TO DOOR.
3. ALL SYMBOLS AND LETTERS TO HAVE A COLOR WHICH CONTRASTS WITH THE SIGN COLOR.
4. ALL SIGNS TO HAVE A COLOR WHICH CONTRASTS WITH THE WALL AND DOOR COLOR.
5. ALL SIGNS TO HAVE A COLOR WHICH CONTRASTS WITH THE WALL ADJACENT TO THE LATCH SIDE OF THE DOOR.
6. REFER TO SIGN "A" THIS DETAIL FOR TYPICAL NOTES.
7. REFER TO ELEVATION FOR SIGN LOCATION INFORMATION.
8. ATTACH SIGN AT HOLLOW METAL DOORS USING ADHESIVE ONLY. SIGN SHALL BE CENTERED HORIZONTALLY ON DOOR.
9. PREMANUFACTURED SIGNS COMPLYING WITH **2016 CBC 11B-703** SIGNAGE REQUIREMENTS.

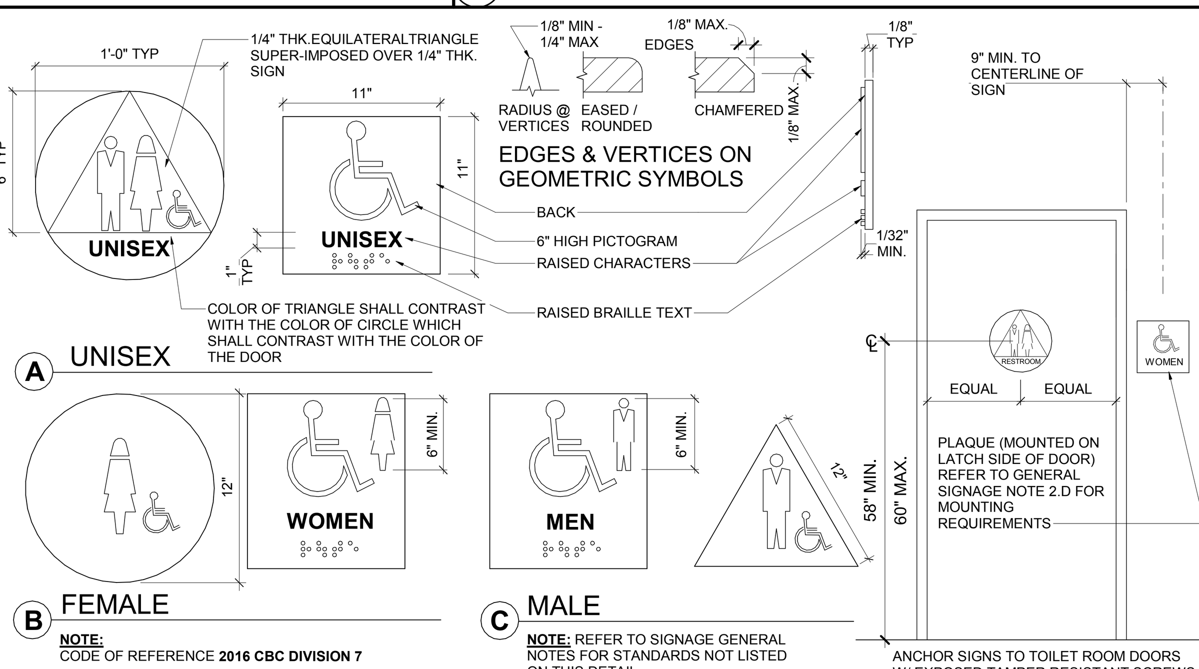

NOTE:
CODE OF REFERENCE **2016 CBC DIVISION 7**

NOTE: REFER TO SIGNAGE GENERAL NOTES FOR STANDARDS NOT LISTED ON THIS DETAIL

13 RESTROOM SIGNAGE

N.T.S.

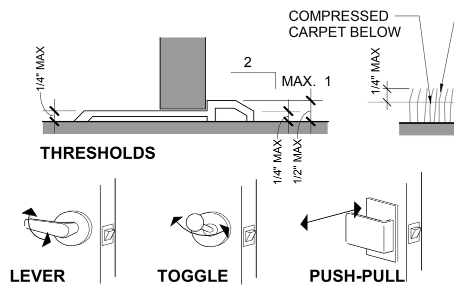

NOTE:
CODE OF REFERENCE **2016 CBC SECTION 1008 & 11B-404.2.5**

1. HARDWARE - HAND ACTIVATED DOOR OPENING HARDWARE WITH NO GRASPING OR WRIST MOVEMENT IS REQUIRED TO BE CENTERED BETWEEN 30INCHES MIN. AND 44 INCHES MAX. ABOVE FINISH FLOOR. **2016 CBC 11B-404.2.7**
2. LATCHING AND LOCKING DOORS THAT ARE HAND ACTIVATED AND WHICH ARE IN A PATH OF TRAVEL HAVE TO BE OPERABLE WITH A SINGLE EFFORT (LEVERS, PUSH-PULLS, OR PANIC DEVICES).
3. LOCKED EXIT DOORS ARE REQUIRED TO OPERATE AS DESCRIBED ABOVE IN THE DIRECTION OF EGRESS WITHOUT USE OF KEY OR SPECIAL KNOWLEDGE OR EFFORT **2016 CBC 1008.1.9**.
4. THRESHOLDS SHALL NOT BE MORE THAN 1/2" HIGH - **2016 CBC 11B-404.2.5**. BEVEL OR SLOPE THE EXPOSED EDGE AT AN ANGLE NOT EXCEEDING 1:2 SLOPE SO THAT NO SINGLE VERTICAL CHANGE OF ELEVATION EXCEEDS 1/4".
5. MAXIMUM EFFORT TO OPERATE DOORS SHALL NOT EXCEED 5.0 POUNDS FOR EXTERIOR DOORS AND 5 POUNDS FOR INTERIOR DOORS - **2016 CBC 11B-404.2.9**, SUCH PULL OR PUSH EFFORT BEING APPLIED AT RIGHT ANGLES TO HINGED DOORS AND AT THE CENTER PLANE OF SLIDING OR FOLDING DOORS. COMPENSATING DEVICES OR AUTOMATIC DOOR OPERATORS MAY BE UTILIZED TO MEET THE ABOVE STANDARDS WHEN FIRE DOORS ARE REQUIRED, THE MAXIMUM EFFORT TO OPERATE THE DOOR MAY BE INCREASED TO THE MINIMUM ALLOWABLE BY THE APPROPRIATE ADMINISTRATIVE AUTHORITY, NOT TO EXCEED 15 POUNDS.
6. RECESSED DOORMATS ARE TO BE ANCHORED TO FLOOR OR APPROVED EQUAL TO PREVENT INTERFERENCE WITH WHEELCHAIR TRAFFIC.

15 DOOR THRESHOLD & HARDWARE

N.T.S.

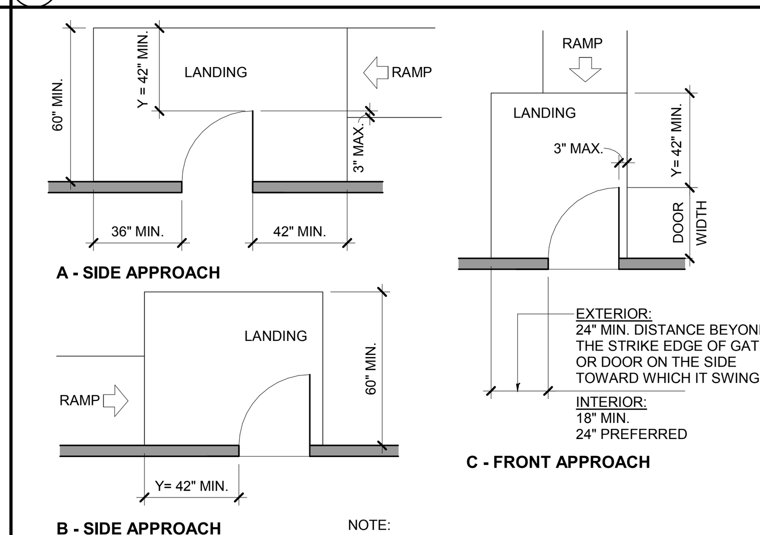

NOTE:
CODE OF REFERENCE **2016 CBC 11B-405.7.5**

NOTES:
1. DOORS IN ANY POSITION SHALL NOT REDUCE THE MINIMUM DIMENSION OF THE RAMP LANDING TO LESS THAN 42" AND DOOR SHALL NOT REDUCE THE REQUIRED WIDTH BY MORE THAT 3" WHEN FULLY OPEN.
2. IF "X" IS GREATER THAN 3" THEN "Y" MUST BE: 60" MINIMUM TOP LANDING AND 72" MINIMUM BOTTOM LANDING.

16 ENCROACHMENT OF DOORS @ RAMP

N.T.S.

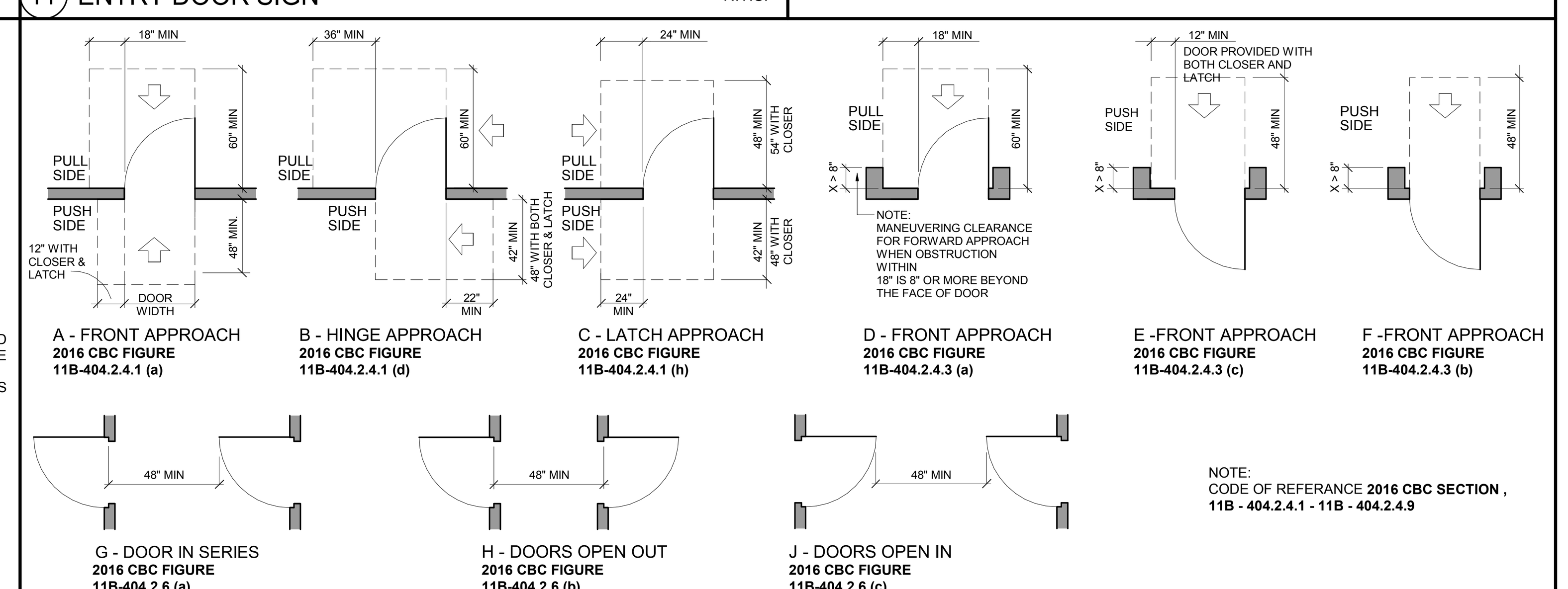

NOTE:
CODE OF REFERANCE **2016 CBC SECTION , 11B - 404.2.4.1 - 11B - 404.2.4.9**

1. FIGURES ABOVE SHOW THE MINIMUM CLEAR AND LEVEL FLOOR SPACE REQUIRED AT DOORS THAT ARE NOT AUTOMATIC OR POWER ASSISTED. THE WIDTH SHALL EXTEND 24" BEYOND THE STRIKE EDGE OF ALL EXTERIOR DOORS AND 18" FOR ALL INTERIOR DOORS U.N.O. INCLUDING POWER-ASSISTED AND AUTOMATIC DOORS.
2. THE SPACE BETWEEN TWO DOORS IN A SERIES, OTHER THAN AT A REQUIRED EXIT STAIRWAY, SHALL SWING THE SAME DIRECTION OR AWAY FROM THE SPACE BETWEEN DOORS. THE SPACE BETWEEN TWO DOORS IN A SERIES SHALL HAVE AT LEAST A 48" CLEAR SPACE AND BE FREE OF DOOR SWINGS. ADDITIONAL MANEUVERING SPACE OF 12 INCHES ON LATCH DOORS AND 18" ON DOORS w/ NO CLOSERS SHALL BE PROVIDED ON THE SWING SIDE OF THE DOOR.

17 DOOR CLEARANCES

N.T.S.

NOTE:
CODE OF REFERENCE **2016 CBC 11B-306 & 604**

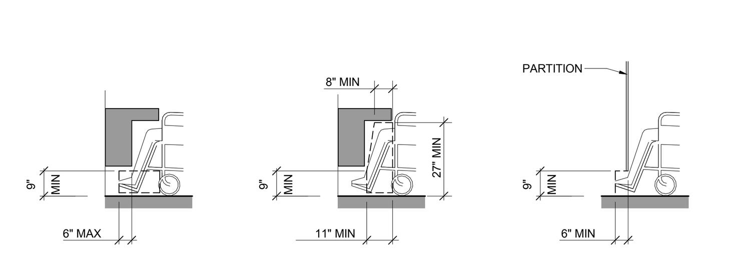

1. SPACE UNDER AN ELEMENT BETWEEN THE FINISH FLOOR OR GROUND AND 9" ABOVE THE FINISH FLOOR OR GROUND SHALL BE CONSIDERED TOE CLEARANCE.
2. TOE CLEARANCE SHALL EXTEND 25" MAXIMUM UNDER AN ELEMENT, WHERE TOE CLEARANCE IS REQUIRED AT AN ELEMENT AS PART OF A CLEAR FLOOR SPACE THE TOE CLEARANCE EXTEND 17" MINIMUM UNDER ELEMENT. TOE CLEARANCE SHALL BE 30" WIDE MINIMUM.
3. SPACE UNDER AN ELEMENT BETWEEN 9" AND 27" ABOVE FINISH FLOOR OR GROUND SHALL BE CONSIDERED KNEE CLEARANCE AND SHALL EXTEND 25" MAXIMUM UNDER AN ELEMENT AT 9" ABOVE FINISH FLOOR OR GROUND. KNEE CLEARANCE SHALL BE 30" WIDE.
4. AT WHEEL CHAIR ACCESSIBLE TOILET COMPARTMENTS THE FRONT PARTITION AND AT LEAST ONE SIDE PARTITION SHALL PROVIDE A TOE CLEARANCE OF 9" MINIMUM ABOVE THE FINISH FLOOR AND 6" DEEP MINIMUM BEYOND THE COMPARTMENT-SIDE FACE OF THE PARTITION. EXCLUSIVE OF PARTITION SUPPORT MEMBERS.

19 KNEE & TOE CLEARANCE

N.T.S.

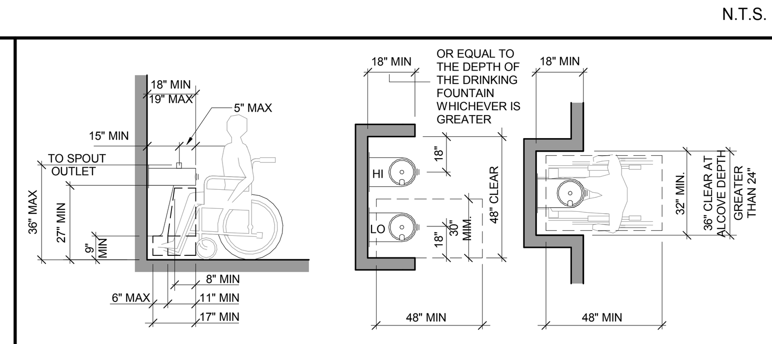

2016 CBC FIGURE 11B-602

1. DRINKING FOUNTAINS, WHEN PROVIDED, SHALL BE POSITIONED WITHIN ALCOVES AT LEAST 32 INCHES WIDE WHERE DEPTH EXCEEDS 18 INCHES, . **2016 CBC 11B-602.9**
2. LOCATION OF DRINKING FOUNTAIN SPOUTS SHALL PROVIDE A FLOW OF WATER 4 INCHES HIGH MINIMUM AND SHALL BE LOCATED WITHIN 5 INCHES MAXIMUM FROM THE FRONT EDGE OF THE UNIT. THE ANGLE OF THE WATER STREAM SHALL BE MEASURED HORIZONTALLY RELATIVE TO THE FRONT FACE OF THE UNIT.WHERE SPOUTS ARE LOCATED LESS THAN 3" OF THE FRONT OF THE UNIT, THE ANGLE OF WATER STREAM SHALL BE 30 DEGREES MAXIMUM. WHERE SPOUTS ARE LOCATED BETWEEN 3 INCHES AND 5 INCHES MAXIMUM FROM THE FRONT EDGE OF THE UNIT, THE ANGLE OF THE WATER STREAM SHALL BE 15 DEGREES MAXIMUM. ON AN ACCESSIBLE DRINKING FOUNTAIN WITH A ROUND OR OVAL BOWL, THE SPOUT MUST BE POSITIONED SO THE FLOW OF WATER IS WITHIN 3 INCHES OF THE FRONT EDGE OF THE FOUNTAIN. **2016 CBC 11B-602.6.**
3. SPOUT OUTLET SHALL BE 36 INCHES MAXIMUM ABOVE FINISH FLOOR OR GROUND **2016 CBC 11B-602.7.**
4. SPOUT OUTLET OF DRINKING FOUNTAIN FOR STANDING PERSONS SHALL BE 38 INCHES MIN. AND 43 INCHES MAX. ABOVE FINISH FLOOR **2016 CBC 11B-602.7**.

20 DRINKING FOUNTAIN

N.T.S.

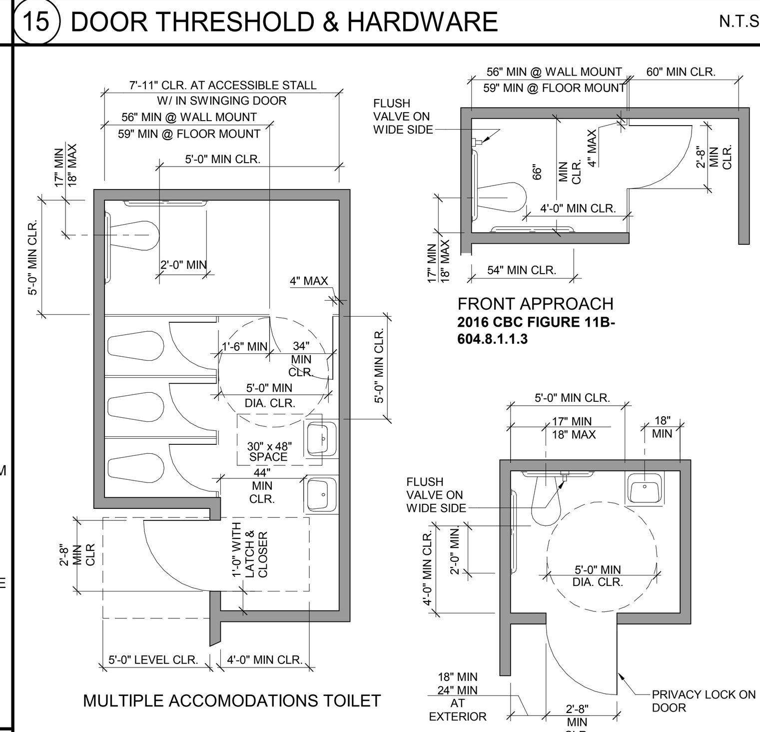

NOTES:
CODE OF REFERENCE **2016 CBC** PLUMBING FIXTURE COUNT SHALL COMPLY WITH **2016 CPC TABLE 422.1**

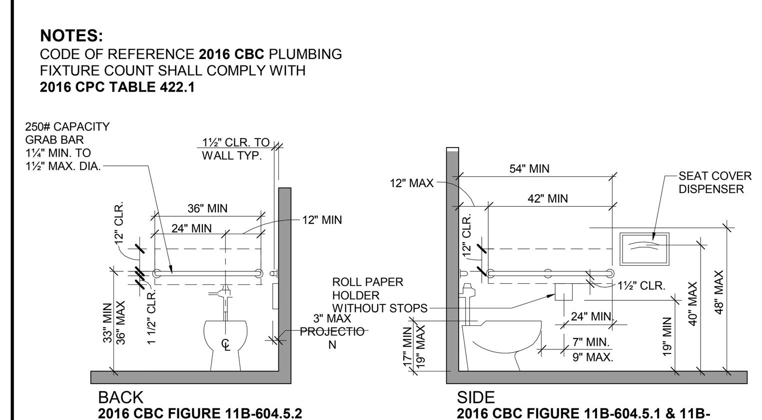

1. SUFFICIENT SPACE IS REQUIRED IN TOILET ROOM FOR A WHEELCHAIR MEASURING 30" WIDE BY 48" LONG TO ENTER ROOM AND PERMIT DOOR TO CLOSE. **2016 CBC 11B-404.2.4**
2. FLUSH CONTROL SHALL BE LOCATED TO MINIMIZE EXCESSIVE BODY MOVEMENT AND SHALL BE AN OSCILLATING HANDLE WITH MAXIMUM 5 LBF. OPERATING FORCE, ELECTRIC OPERATION OR APPROVED EQUAL. FLUSH CONTROL SHALL BE LOCATED AT OPEN SIDE OF STALL. COMPARTMENT (SIDE & FRONT ENTRANCE): **2016 CBC 11B-604.6**
3. CLOSER - EQUIP THE DOOR INTO THE STALL WITH AUTO CLOSING DEVICE. **2016 CBC 11B-604.8.2.2**
4. CLEARANCE - PROVIDE 44" WIDE CLEAR PATH TO STALL AND A 48" SPACE IN FRONT OF COMPARTMENT DOOR, MEASURED AT RIGHT ANGLES TO DOOR. **2016 CBC 11B-604.8.2.2**
5. MANEUVERING SPACE. **2016 CBC 11B-604.8.1.1.1, 11B-604.8.1.1.2 & 11B-6041.1.3**

27 RESTROOMS

N.T.S.

NOTES:
- CURB OR WHEEL STOP SHALL BE PROVIDED IF REQUIRED TO PREVENT ENCROACHMENT OF VEHICLES OVER THE REQUIREDCLEAR WIDTH OF ADJACENT ACCESSIBLE ROUTES.
- PARKING SPACES AND ACCESS AISLES SHALL BE DESIGNED SO THAT PERSONS USING THEM ARE NOT REQUIRED TO TRAVEL BEHIND PARKING SPACES OTHER THAN TO PASS BEHIND THE PARKING SPACE IN WHICH THEY ARE PARKED.
- SHALL COMPLY WITH 11B-302. ACCESS AISLES SHALL BE AT THE SAME LEVEL AS THE VEHICLE PULL-UP SPACE THEY SERVE CHANGES IN LEVEL ARE NOT PERMITTED.
- CAR AND VAN PARKING SPACES SHALL COMPLY WITH SECTION 11B-502. WHERE PARKING SPACES ARE MARKED WITH LINES WIDTH MEASUREMENTS OF PARKING SPACES AND ACCESS AISLES SHALL BE MADE FROM THE CENTERLINE OF THE MARKINGS.
- PARKING SPACES AND ACCESS AISLES SHALL BE DESIGNED SO THAT CARS AND VAN, WHEN PARKED, CANNOT OBSTRUCT THE REQUIRED CLEAR WIDTH OF ADJACENT ACCESSIBLE ROUTES.
- AN ADDITIONAL SIGN SHALL BE POSTED EITHER; 1. IN A CONSPICUOUS PLACE AT EACH ENTRANCE TO AN OFF STREET PARKING FACILITY; 2 IMMEDIATELY ADJACENT TO ON SITE ACCESSIBLE PARKING AND VISIBLE FROM EACH PARKING SPACE.
- EACH ACCESSIBLE CAR AND VAN SPACE SHALL HAVE SURFACE IDENTIFICATION COMPLYING WITH EITHER SECTIONS 11B-502.6.4.1 OR 11B-502.6.4.2
- ACCESS AISLE SHALL SERVING CAR AND VAN PARKING SPACES SHALL BE 60 INCHES WIDE MINIMUM. PARKING SPACES THEY SERVE.
- CAR AND VAN PARKING SPACES SHALL BE 216 INCHES LONG MINIMUM. CAR PARKING SPACES SHALL BE 108 INCHES WIDE MINIMUM AND VAN PARKING SPACES SHALL BE 144 INCHES WIDE MINIMUM, SHALL BE MARKED TO DEFINE THE WIDTH, AND SHALL HAVE AN ADJACENT ACCESS AISLE.
- PARKING SPACE IDENTIFICATIONS SIGNS SHALL INCLUDE THE INTERNATIONAL SYMBOL OF ACCESSIBILITY COMPLYING WITH SECTION 11B-703.7.2.1 SIGNS IDENTIFYING VAN PARKING SPACES SHALL CONTAIN ADDITIONAL LANGUAGE OR AN ADDITIONAL SIGN WITH THE DESIGNATION " VAN ACCESSIBLE". SIGNS SHALL BE 60 INCHES MINIMUM ABOVE THE FINISH FLOOR OR GROUND SURFACE MEASURED TO THE BOTTOM OF THE SIGN
- PARKING SPACES, ACCESS AISLES AND VEHICULAR ROUTES SERVING THEM SHALL PROVIDE A VERTICAL CLEARANCE OF 98 INCHES MINIMUM.
- ACCESS AISLES SHALL NOT OVERLAP THE VEHICULAR WAY. ACCESS AISLES SHALL BE PERMITTED TO BE PLACED ON EITHER SIDE OF THE PARKING SPACE EXCEPT FOR VAN PARKING SPACES WHICH SHALL HAVE ACCESS AISLES LOCATED ON THE PASSENGER SIDE OF THE PARKING SPACES.

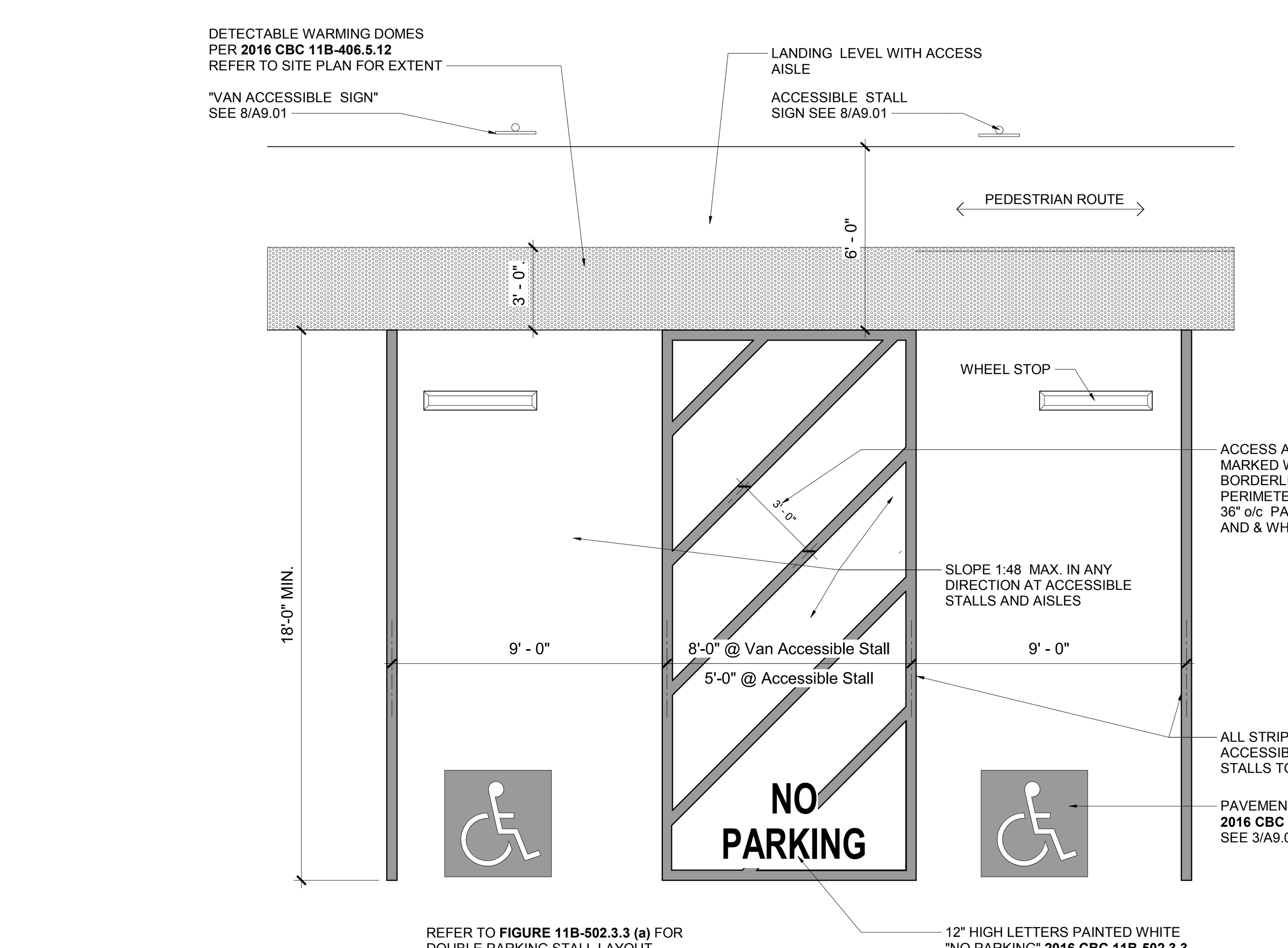

28 ACCESSIBLE PARKING

NOTE:
CODE OF REFERENCE **2016 CBC SECTION 11B-605**

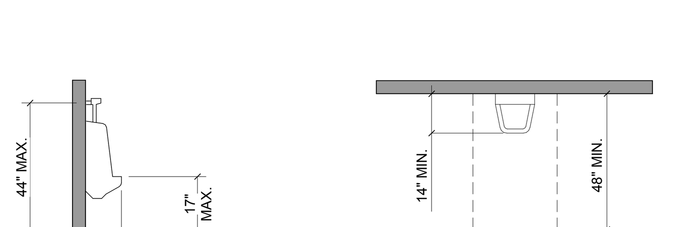

1. FLUSH CONTROLS TO BE HAND OPERATED, MEET THE SAME REQUIREMENTS AS THE FLUSH CONTROLS FOR THE WATER CLOSET AND ARE TO BE NO MORE THAN 44 INCHES ABOVE THE FLOOR MAX **2016 CBC 11B-605.4**
2. FLUSH CONTROLS SHALL BE OPERATED BY OSCILLATING HANDLE WITH 5 LBF. MAX. OPERATING FORCE. CONTROLS SHALL ALSO BE OPERABLE BY ONE (1) HAND AND SHALL NOT REQUIRE TIGHT GRASPING, PINCHING OR TWISTING OF WRIST **2016 CBC 11B-309.4**

25 URINALS

N.T.S.

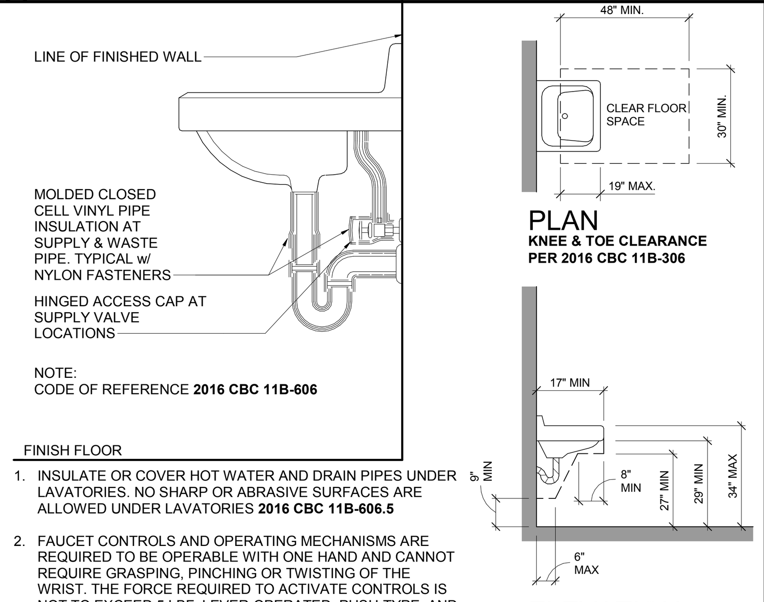

1. INSULATE OR COVER HOT WATER AND DRAIN PIPES UNDER LAVATORIES. NO SHARP OR ABRASIVE SURFACES ARE ALLOWED UNDER LAVATORIES **2016 CBC 11B-606.5**
2. FAUCET CONTROLS AND OPERATING MECHANISMS ARE REQUIRED TO BE OPERABLE WITH ONE HAND AND CANNOT REQUIRE GRASPING, PINCHING OR TWISTING OF THE WRIST. THE FORCE REQUIRED TO ACTIVATE CONTROLS IS NOT TO EXCEED 5 LBF. LEVER-OPERATED, PUSH-TYPE, AND ELECTRONICALLY CONTROLLED MECHANISMS ARE EXAMPLES OF ACCEPTABLE DESIGNS. SELF-CLOSING VALVES ARE ALLOWED IF THE FAUCET REMAINS OPEN FOR AT LEAST 10 SECONDS **2016 CBC 11B-606.4**.

26 ACCESSIBLE LAVATORY

N.T.S.

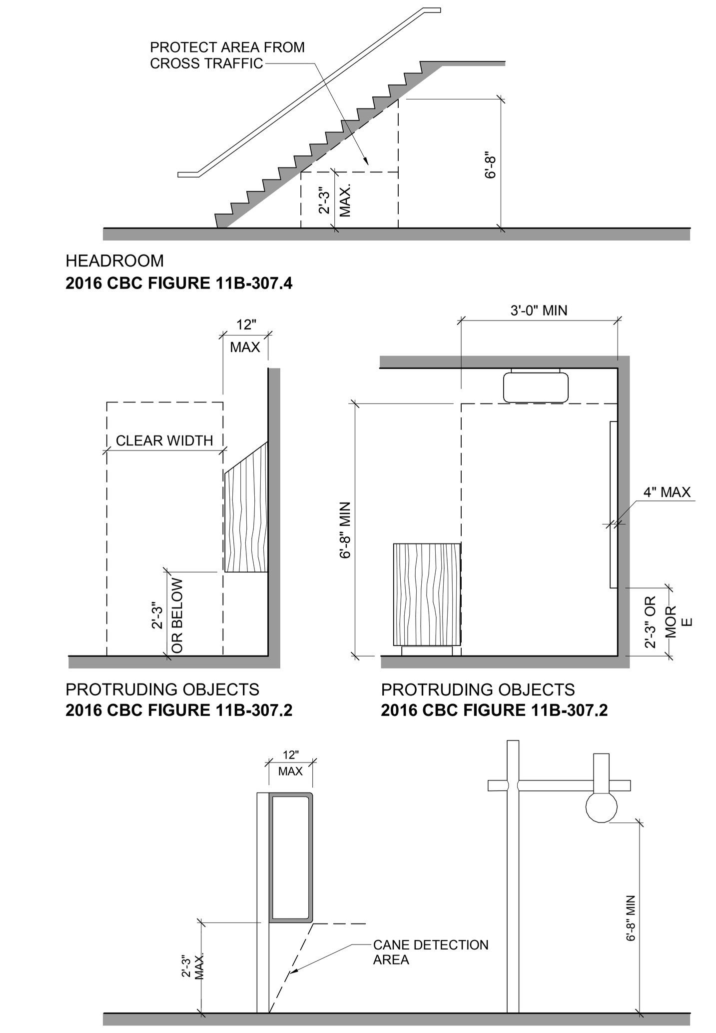

NOTE:
CODE OF REFERENCE **2016 CBC SECTION 11B 307.5**

1. OVERHANG OBSTRUCTIONS. ANY OBSTRUCTION THAT OVERHANGS A ROUTE BY WHICH A PERSON MAY PASS IS REQUIRED TO BE AT LEAST 80 INCHES ABOVE THE WALKING SURFACE AS MEASURED TO THE BOTTOM OF THE OBSTRUCTION **2016 CBC 11B-307.3**
2. PROTRUDING OBJECTS.
   A. OBJECTS WITH THEIR LEADING EDGES BETWEEN 27 INCHES AND 80 INCHES FROM THE WALK CANNOT PROTRUDE MORE THAN 4 INCHES INTO WALKS OR SIDEWALKS **2016 CBC 11B-307.2**
   B. OBJECTS WITH THEIR LEADING EDGES WITHIN 27 INCHES OF THE WALK MAY PROTRUDE ANY DISTANCE, BUT MAY NOT REDUCE CLEAR FLOOR SPACE OR MANEUVERING SPACE FOR A WHEELCHAIR **2016 CBC 11B-307.2**
   C. FREE STANDING OBJECTS ON POSTS OR PYLONS MAY OVERHANG 12 INCHES FROM 27 INCHES TO 80 INCHES ABOVE THE WALK **2016 CBC 11B-307.3.1**

30 OBSTRUCTIONS

N.T.S.

Klassen corporation
Architecture Construction
2021 Westwind Drive
Bakersfield, CA 93301
(661) 324-3000
(661) 324-3900 Fax
www.klassencorp.com

LICENSED ARCHITECT EDGAR L. CHILDRESS C14520 REN 9-30-19 STATE OF CALIFORNIA

The above drawings and specifications and ideas, designs and arrangements represented thereby are and shall remain the property of the architect: and no part thereof shall be copied, disclosed to others or used in connection with any work or project other than the specific project for which they have been prepared and developed without the written consent of the architect. Visual contact with these drawings or specifications shall constitute conclusive evidence of acceptance of these restrictions.

Written dimensions on these drawings shall have precedence over scaled dimension: contractors shall verify and be responsible for, all dimensions and conditions on the job and this office must be notified of any variations from the dimensions and conditions shown by these drawings. Shop details must be submitted to this office for approval before proceeding with fabrication.

TENANT IMPROVEMENTS
SAN JOAQUIN VALLEY PULMONARY
5801 TRUXTUN AVE, BAKERSFIELD CA 933309

DATE	ISSUED FOR	MARK
08/15/19	OWNER CD & GA SUBMITTAL	
08/23/19	BIDDING	

Project No. : 05-1-19504

ACCESSIBILITY DETAILS

A9.01

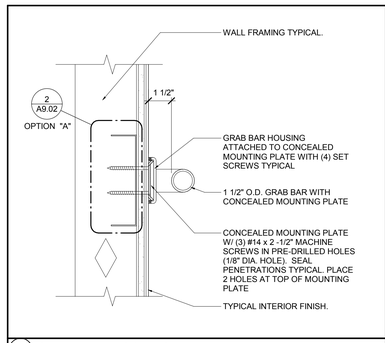

1 GRAB BAR BLOCKING 3" = 1'-0"

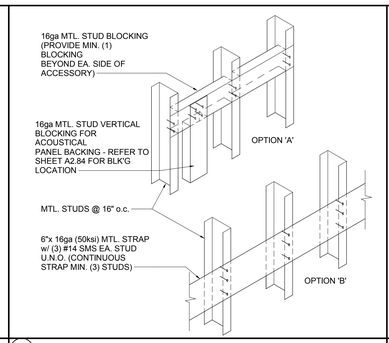

2 BACKING FOR WALL MOUNTED ITEMS 3" = 1'-0"

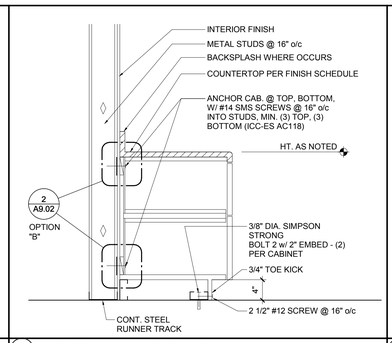

3 BASE CABINET ANCHORAGE 1" = 1'-0"

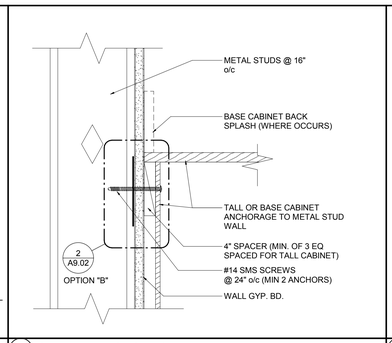

4 CABINET ANCHORAGE 3" = 1'-0"

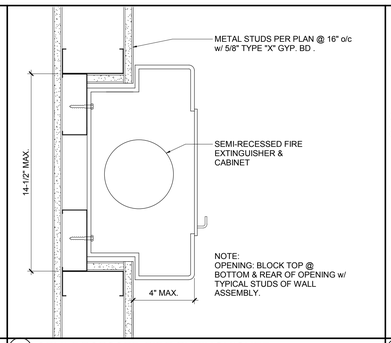

5 SEMI-RECESSED FIRE EXTINGUISHER 3" = 1'-0"

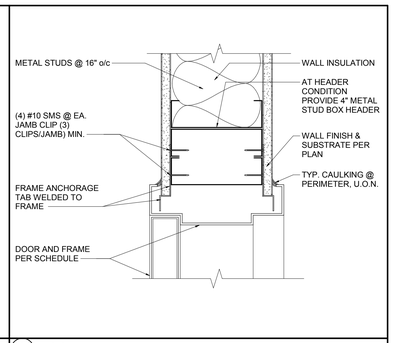

6 DOOR JAMB / HEAD 3" = 1'-0"

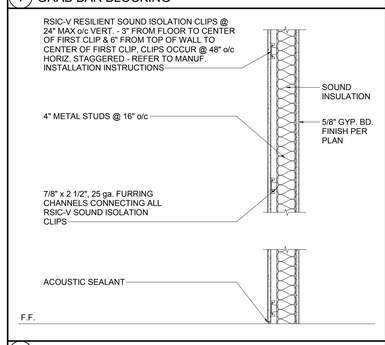

7 SOUND WALL ASSEMBLY 1" = 1'-0"

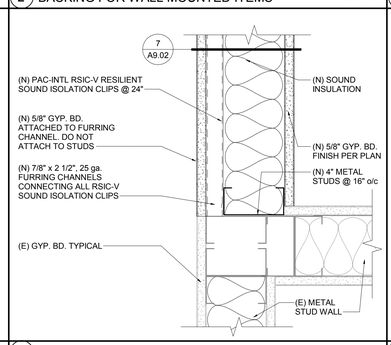

8 SOUND WALL @ (E) WALL 3" = 1'-0"

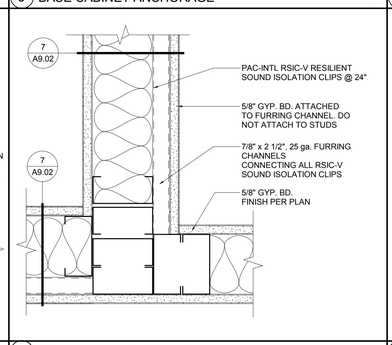

9 SOUND WALL @ COMMON WALL 3" = 1'-0"

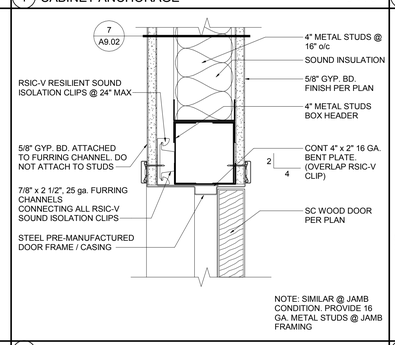

10 SOUND WALL @ DOOR JAMB / HEAD 3" = 1'-0"

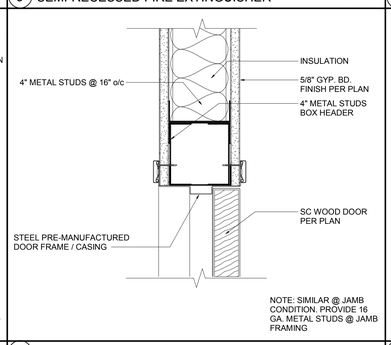

11 DOOR JAMB / HEAD @ METAL STUD WALL 3" = 1'-0"

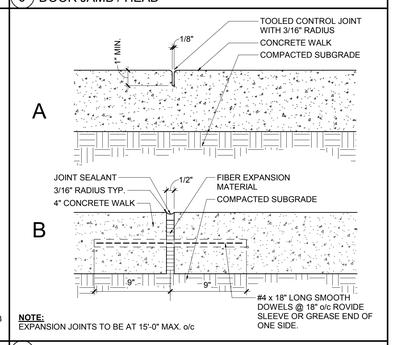

12 CONC. JOINT N.T.S.

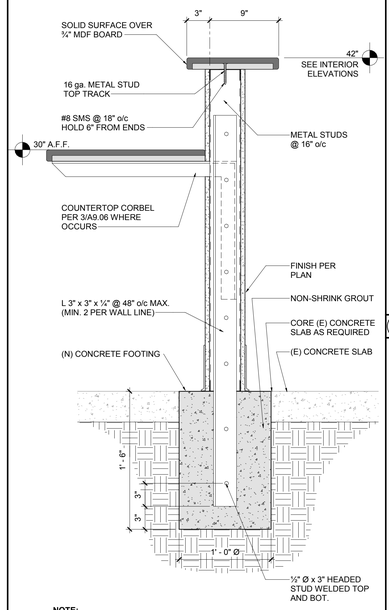

13 UNBRACED PARTITION WALL BRACING 1½" = 1'-0"

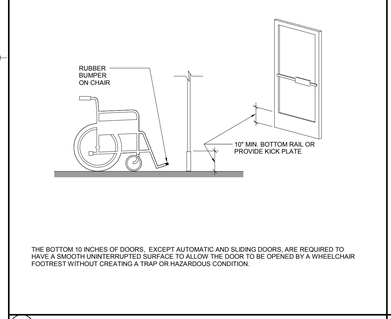

14 DOOR CONSTRUCTION 12" = 1'-0"

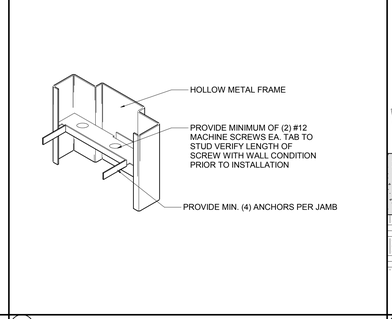

15 JAMB ANCHORS 3" = 1'-0"

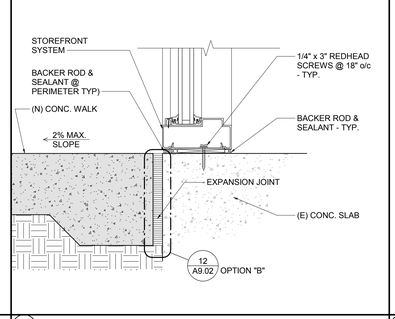

16 STOREFRONT SYSTEM @ CONCRETE SLAB 3" = 1'-0"

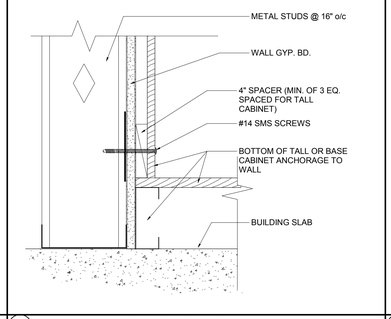

17 CABINET ANCHORAGE @ BASE 3" = 1'-0"

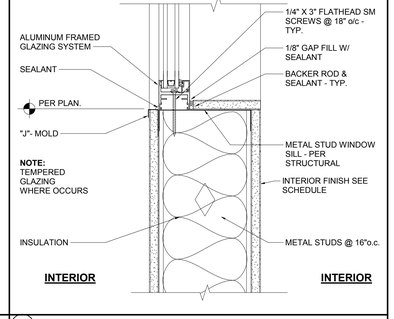

18 INTERIOR WINDOW SILL / JAMB 3" = 1'-0"

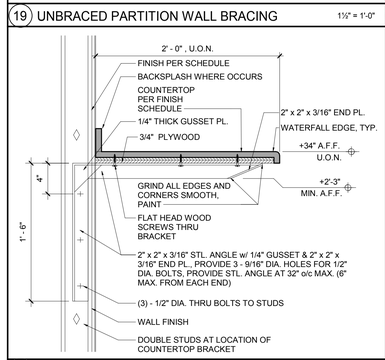

25 COUNTERTOP 1 1/2" = 1'-0"

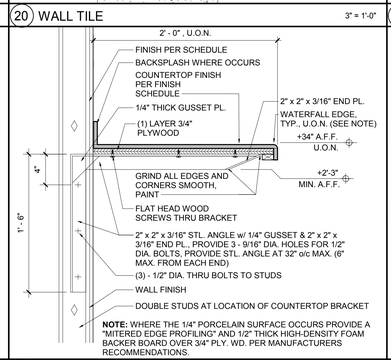

26 SOLID SURFACE COUNTERTOP 1 1/2" = 1'-0"

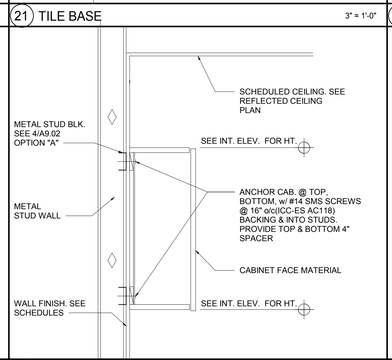

27 UPPER CABINET ANCHORAGE 1" = 1'-0"

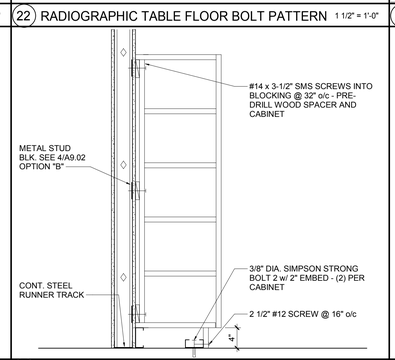

28 TALL CABINET ANCHORAGE 1" = 1'-0"

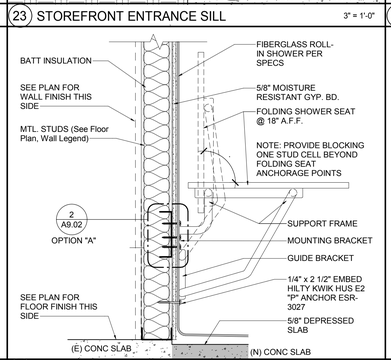

29 FOLDING SHOWER SEAT 1½" = -1'-0"

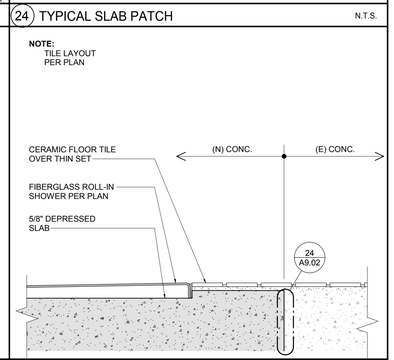

30 FLOOR TILE TO SHOWER FLOOR TRANSITION 3" = 1'-0"

Klassen corporation
Architecture Construction
2021 Westwind Drive
Bakersfield, CA 93301
(661) 324-3000
(661) 324-3900 Fax
www.klassencorp.com

LICENSED ARCHITECT EDGAR L. CRUZADO C14520 REN 9.30.19 STATE OF CALIFORNIA

The above drawings and specifications and ideas, designs and arrangements represented thereby are and shall remain the property of the architect and no part thereof shall be copied, disclosed to others or used in connection with any work or project other than the specific project for which they have been prepared and developed without the written consent of the architect. Visual contact with these drawings or specifications shall constitute conclusive evidence of acceptance of these restrictions.

Written dimensions on these drawings shall have precedence over scaled dimension; contractors shall verify and be responsible for, all dimensions and conditions on the job and this office must be notified of any variation from the dimensions and conditions shown by these drawings. Shop details must be submitted to this office for approval before proceeding with fabrication.

TENANT IMPROVEMENTS
SAN JOAQUIN VALLEY PULMONARY
5801 TRUXTUN AVE, BAKERSFIELD CA 933309

MARK	ISSUED FOR	DATE
	OWNER CD & GA SUBMITTAL	08/15/19
	BIDDING	08/23/19

Project No. : 05-1-19504

ARCHITECTURAL DETAILS

A9.02

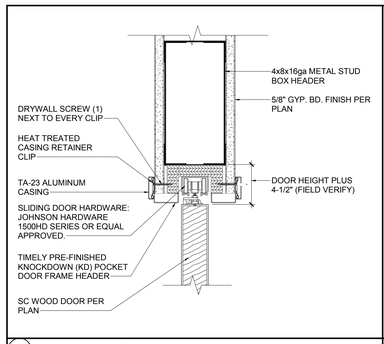

1 POCKET DOOR HEAD 3" = 1'-0"

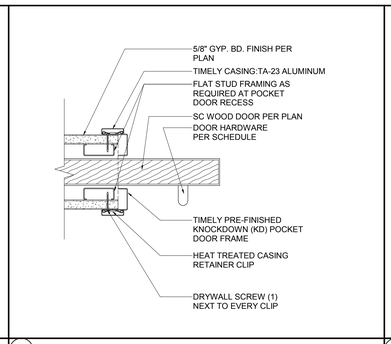

2 POCKET DOOR JAMB 3" = 1'-0"

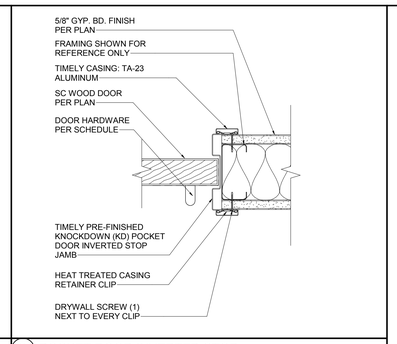

3 POCKET DOOR INVERTED STOP 3" = 1'-0"

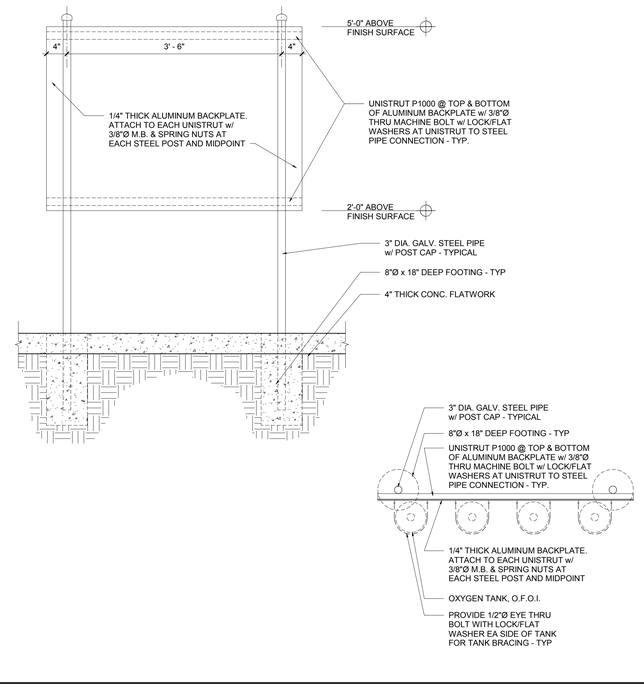

10 OXYGEN TANK BRACING 1" = 1'-0"

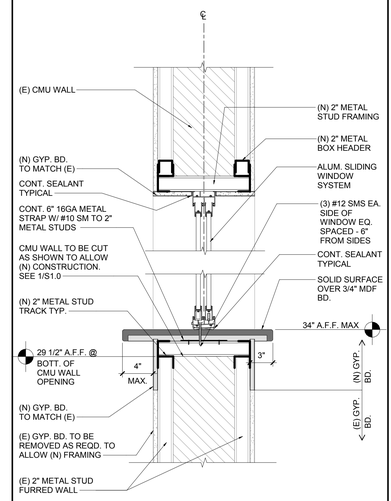

NOTE: CONTRACTOR SHALL FIELD VERIFY FINISHED OPENING PRIOR TO TO WINDOW INSTALLATION

12 SLIDING ALUMINUM WINDOW SYSTEM 1 1/2" = 1'-0"

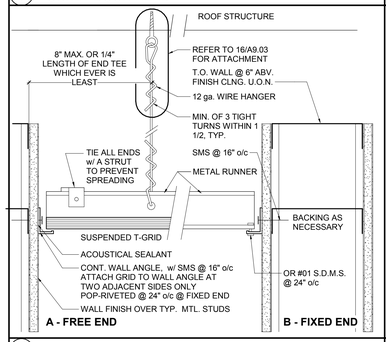

7 SUSPENDED CEILING TO WALL 3" = 1'-0"

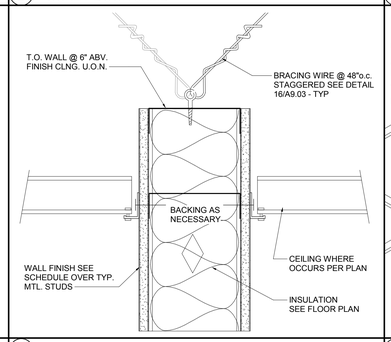

8 NON-BEARING WALL 3" = 1'-0"

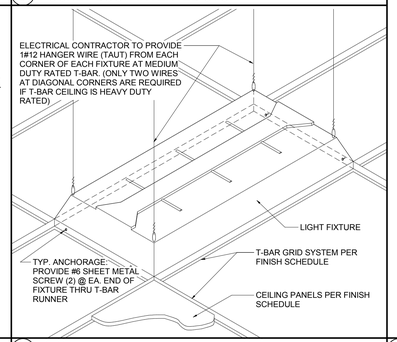

9 FLUSH FIXTURE MOUNTING 3/4" = 1'-0"

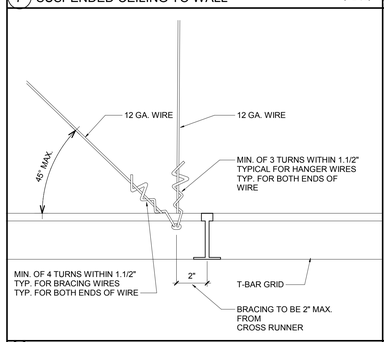

13 HANGER / BRACING WIRE 3" = 1'-0"

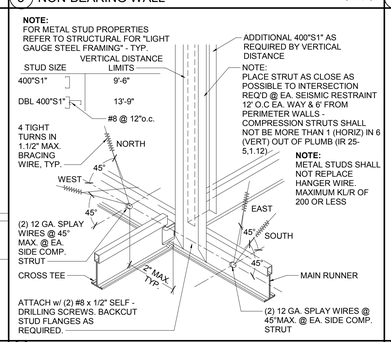

14 SUSPENDED CEILING BRACING 3" = 1'-0"

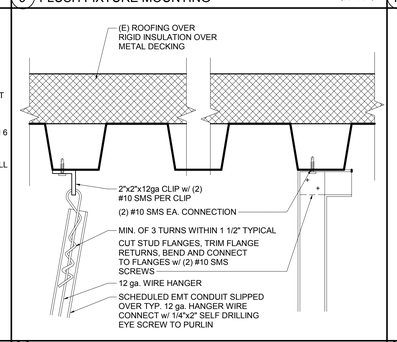

15 STRUT TO METAL DECKING 3" = 1'-0"

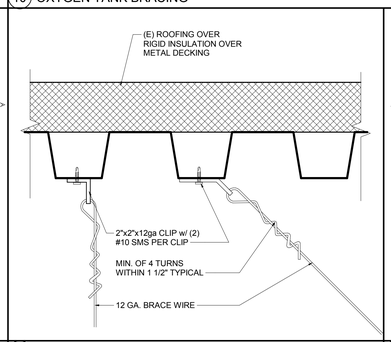

16 HANGER/BRACE WIRE TO METAL DECKING 3" = 1'-0"

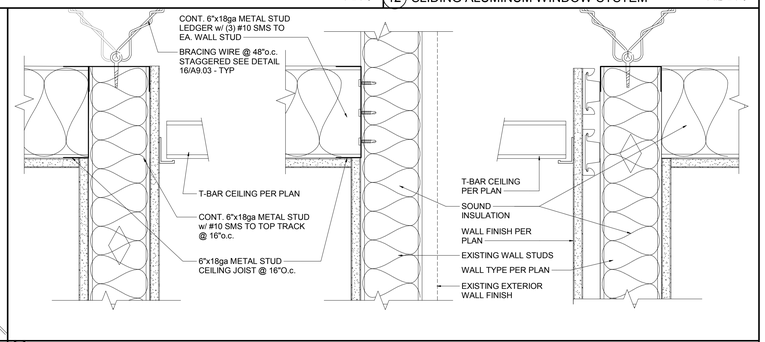

17 HARD LID CEILING JOIST @ WALL 3" = 1'-0"

RADIATION SHIELDING
LEAD LINED DRYWALL

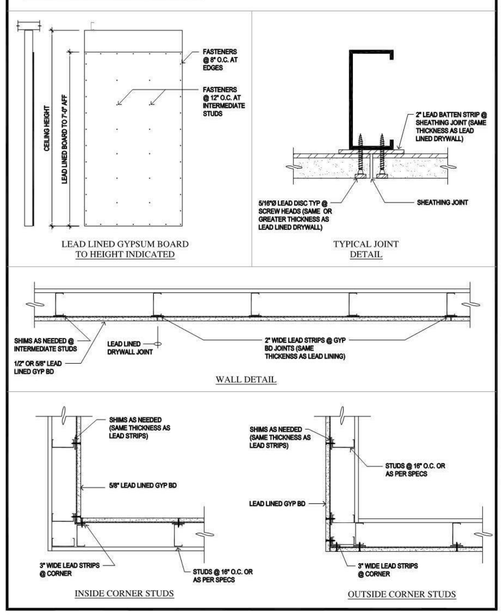

RADIATION SHIELDING
DRYWALL CUT OUTS AND PENETRATIONS

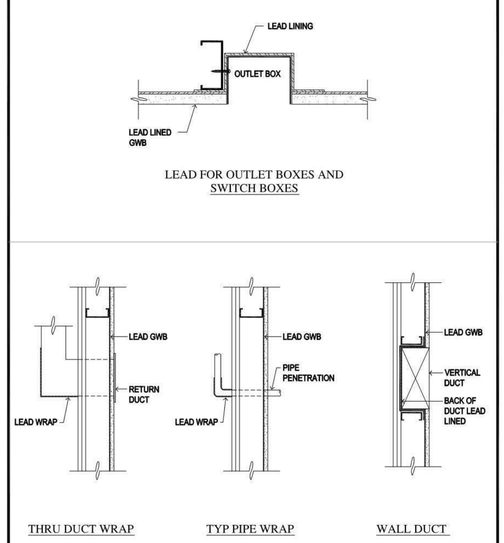

RADIATION SHIELDING
LEAD LINED DRYWALL INSTALLATION INFORMATION

Lead-Laminated Gypsum Board: Single unpierced layer of sheet lead laminated to back of gypsum board.

Lead Lined Drywall (also referred to as Lead Lined Sheetrock or Lead Lined Gypsum) supplied with lead lining bonded to 1/2" or 5/8" drywall.

2" lead batten strips of the same lead thickness and height of lead lined drywall are required to provide the necessary 1" overlap with adjoining Lead Lined Drywall sheets.

5/16" diameter lead discs, same thickness as sheet lead, may be required at screw heads. Lead angle of same thickness lead may be used in place of discs.

3" minimum lead corner batten strips, same lead thickness and height of lead lined drywall, are required for inside and outside corners of wall intersections. This lead is bent on angle to create a 1-1/2" center on both sides of lead.

Screw Fasteners: Type S Bugle Head, length as required.

The Lead Lined Drywall should be fastened at a minimum of 8" on center at the edges of each sheet, and at minimum of 12" on center at the intermediate studs with normal drywall screws.

Comply with manufacturer's recommendations for wrapping electrical outlet boxes, view window frames, and other penetrations through lead barrier material with sheet lead to provide radiation protection to levels indicated or levels required to match adjacent wall protection.

Wherever lead protection is penetrated, cut, or punctured, assure continuity of shielding by use of sheet lead (same thickness as sheet lead), lead plugs or other approved method.

Install sheet lead lining within steel door frames to provide radiation protection to levels indicated or levels required to match adjacent wall protection.

25 LEAD-LINED GYP. BD. INSTALLATION

Klassen corporation
Architecture Construction
2021 Westwind Drive
Bakersfield, CA 93301
(661) 324-3000
(661) 324-3900 Fax
www.klassencorp.com

LICENSED ARCHITECT EDGAR L. CRUZADO C14520 REN 9-30-19 STATE OF CALIFORNIA

The above drawings and specifications and ideas, designs and arrangements represented thereby are and shall remain the property of the architect and no part thereof shall be copied, disclosed to others or used in connection with any work or project other than the specific project for which they have been prepared and developed without the written consent of the architect. Visual contact with these drawings or specifications shall constitute conclusive evidence of acceptance of these restrictions.

Written dimensions on these drawings shall have precedence over scaled dimension; contractors shall verify and be responsible for, all dimensions and conditions on the job and this office must be notified of any variation from the dimensions and conditions shown by these drawings. Shop details must be submitted to this office for approval before proceeding with fabrication.

TENANT IMPROVEMENTS
SAN JOAQUIN VALLEY PULMONARY
5801 TRUXTUN AVE, BAKERSFIELD CA 933309

MARK	ISSUED FOR	DATE
△	OWNER CD & GA SUBMITTAL	08/15/19
△	BIDDING	08/23/19
△		
△		
△		
△		
△		

Project No. : 05-1-19504

ARCHITECTURAL DETAILS

A9.03

1 STRUCTURAL SPECIFICATIONS

GENERAL
ALL WORK SHALL CONFORM TO THE REQUIREMENTS OF THE 2016 CALIFORNIA BUILDING CODE (CBC).

EXPANSION ANCHORS
EXPANSION ANCHORS IN CONCRETE SHALL BE SIMPSON STRONG-BOLT 2 AND IN MASONRY SHALL BE SIMPSON WEDGE-ALL, OR AN APPROVED EQUAL, AND SHALL BE INSTALLED PER THE MANUFACTURER'S REQUIREMENTS AND ICC-ES ESR-3037 AND ESR-1396 RESPECTIVELY.

MECHANICAL SCREW ANCHORS
MECHANICAL SCREW ANCHORS SHALL BE SIMPSON TITEN HD ANCHORS OR APPROVED EQUAL, AND SHALL BE INSTALLED PER THE MANUFACTURER'S REQUIREMENTS AND ICC-ES ESR-2713 FOR CONCRETE AND ESR-1056 FOR CMU.

STRUCTURAL STEEL AND MISCELLANEOUS IRON
STRUCTURAL STEEL AND MISCELLANEOUS IRON SHALL CONFORM TO THE REQUIREMENTS OF ASTM A36, EXCEPT THAT ALL WIDE FLANGE SECTIONS SHALL BE ASTM A992. ALL STRUCTURAL STEEL AND MISCELLANEOUS IRON SHALL RECEIVE A SHOP PRIME COAT, EXCEPT ON SURFACES TO RECEIVE WELDS AND AT SLIP-CRITICAL TYPE HIGH STRENGTH BOLTED CONNECTIONS, WHICH SHALL BE TOUCHED UP AFTER CONNECTION IS COMPLETE. STRUCTURAL STEEL AND MISCELLANEOUS IRON THAT IS TO HAVE SPRAY-ON FIREPROOFING SHALL NOT BE PAINTED. ALL EXPOSED STRUCTURAL STEEL SHALL BE PER AISC AESS SPECIFICATIONS, SECTION 10 OF CODE OF STANDARD PRACTICE. ALL MOMENT FRAMES AND BRACED FRAMES SHALL BE PER AISC SEISMIC PROVISIONS FOR STRUCTURAL STEEL BUILDINGS.

LIGHT GAUGE METAL FRAMING
LIGHT GAUGE METAL FRAMING SHALL BE FABRICATED AND ERECTED IN ACCORDANCE WITH THE SPECIFICATIONS OF THE STEEL STUD MANUFACTURER'S ASSOCIATION (SSMA), CBC SECTION 2211, AND ICC-ES ESR-3064P. FRAMING AND CONNECTIONS NOT SPECIFICALLY DETAILED BY THE DRAWINGS, SUCH AS REQUIRED FOR CEILING FRAMING AND ARCHITECTURAL FEATURES, SHALL SATISFY THE REQUIREMENTS OF THE CBC, AND ARE BASED ON THE RECOMMENDATIONS OF THE SSMA.

WELDING
ALL WELDING SHALL BE PERFORMED BY WELDERS CERTIFIED TO PERFORM THE TYPE OF WORK REQUIRED AS DEFINED BY THE AWS "STANDARD QUALIFICATION PROCEDURE". ALL WELDING SHALL BE IN ACCORDANCE WITH THE AWS WELDING CODE. ARC WELDING ELECTRODES SHALL BE E70 SERIES. ALL ELECTRODES SHALL BE LOW HYDROGEN WITH A MINIMUM CVN VALUE OF 20 FT-LBS AT MINUS 20°F. THE ONLY EXCEPTIONS SHALL BE AS FOLLOWS: WELDING FOR METAL DECK, STAIR AND HANDRAIL, AND LIGHT GAUGE STEEL. WELD METAL TOUGHNESS SHALL BE REPORTED ON THE ELECTRODE MANUFACTURER'S CERTIFICATE OF COMPLIANCE. THE FILLER METAL MANUFACTURER'S PUBLISHED RECOMMENDATIONS SHALL BE THE BASIS FOR DETERMINING THE ALLOWABLE RANGE OF ESSENTIAL VARIABLES FOR THE PREQUALIFIED WELDING PROCEDURE SPECIFICATION (WPS). TACK WELDS, AIR-ARC GOUGING, AND FLAME CUTTING SHALL NOT BE PERFORMED WITHOUT ADEQUATE PREHEATING OR INCORPORATION INTO THE FINAL WELD. ALL WELDING AT MOMENT-FRAME AND BRACED-FRAME CONNECTIONS SHALL BE PERFORMED PER THE ADDITIONAL REQUIREMENTS OF AWS D1.8 SEISMIC SUPPLEMENT IN COMPLIANCE WITH AISC SEISMIC PROVISIONS FOR STRUCTURAL STEEL BUILDINGS.

POWER ACTUATED FASTENERS
POWER ACTUATED FASTENERS SHALL BE HILTI FASTENERS, OR APPROVED EQUAL. FOR WOOD SILL PLATE TO CONCRETE APPLICATIONS, FASTENERS SHALL BE "X-CP 72" TYPE IN CONFORMANCE WITH ICC-ES ESR-2379. FOR ALL OTHER APPLICATIONS, FASTENERS SHALL BE "X-U P8S36" TYPE IN CONFORMANCE WITH ICC-ES ESR-2269.

REQUESTS FOR SUBSTITUTION
THE CONTRACTOR MAY SUBMIT A REQUEST FOR SUBSTITUTION (RFS) FOR SPECIFIED STRUCTURAL MATERIALS OR PRODUCTS FOR REVIEW BY THE ENGINEER. ANY SUCH RFS SHALL DOCUMENT THE ITEM(S) UNDER CONSIDERATION, THE EFFECTS OF SUBSTITUTION ON COST, PERFORMANCE AND SCHEDULE, AND SHALL INCLUDE RESPECTIVE APPROVAL(S) BY ICC OR RELATED AGENCIES. ALL COSTS INCURRED BY THE ENGINEER AS PART OF ANY RFS SUBMITTAL, SUCH FOR ADDITIONAL RESEARCH, REVIEW OR REDESIGN OF STRUCTURAL ELEMENTS OR SYSTEMS, SHALL BE DIRECTLY REIMBURSED BY THE CONTRACTOR.

EXISTING CONDITIONS
PRIOR TO ORDERING OR FABRICATING ANY MATERIAL, THE CONTRACTOR SHALL FIELD VERIFY ALL CONTROLLING FIELD DIMENSIONS AND CONDITIONS. ANY DISCREPANCIES BETWEEN THE EXISTING CONDITIONS AND CONSTRUCTION DOCUMENTS SHALL BE BROUGHT TO THE IMMEDIATE ATTENTION OF THE ARCHITECT AND ENGINEER. IN ADDITION, THE CONTRACTOR IS ALERTED TO THE POSSIBILITY THAT EXISTING STRUCTURAL MATERIALS UNSUITABLE FOR REUSE DUE TO DETERIORATION MAY BE DISCOVERED DURING THE COURSE OF CONSTRUCTION. THESE CONDITIONS SHALL BE BROUGHT TO THE ATTENTION OF THE ARCHITECT AND ENGINEER FOR REVIEW AND APPROVAL OF PROPOSED REPLACEMENT MATERIALS.

CONSTRUCTION LIABILITY
CONSTRUCTION CONTRACTOR AND HIS SUBCONTRACTORS AGREE THAT IN ACCORDANCE WITH GENERALLY ACCEPTED CONSTRUCTION PRACTICES, THE CONSTRUCTION CONTRACTOR AND HIS SUBCONTRACTORS WILL BE REQUIRED TO ASSUME SOLE AND COMPLETE RESPONSIBILITY FOR JOB SITE CONDITIONS DURING THE COURSE OF PROJECT CONSTRUCTION, INCLUDING THE SAFETY OF ALL PERSONS AND PROPERTY; THAT THIS REQUIREMENT SHALL BE MADE TO APPLY CONTINUOUSLY AND NOT LIMITED TO NORMAL WORKING HOURS; AND THE CONSTRUCTION CONTRACTOR AND HIS SUBCONTRACTORS FURTHER AGREE TO DEFEND, INDEMNIFY AND HOLD DESIGN PROFESSIONAL HARMLESS FROM ANY AND ALL LIABILITY, REAL OR ALLEGED, IN CONNECTION WITH THE PERFORMANCE OF WORK IN THIS PROJECT, EXCEPT FOR LIABILITY ARISING FROM THE SOLE NEGLIGENCE OF THE DESIGN PROFESSIONAL.

2 SPECIAL INSPECTIONS

GENERAL

THE OWNER SHALL EMPLOY A SPECIAL INSPECTOR DURING CONSTRUCTION ON THE FOLLOWING TYPES OF WORK, AND FOR ANY ADDITIONAL REQUIREMENTS OF THE BUILDING OFFICIAL WHERE APPLICABLE:

EXPANSION ANCHORS
PROVIDE PERIODIC INSPECTION DURING THE TESTING OF EXPANSION ANCHORS. ALL TESTS SHALL BE IN ACCORDANCE WITH CBC CHAPTER 17, AND RESPECTIVE ICC-ES REPORT(S). THE CONTRACTOR MUST SUBMIT A TEST REPORT TO THE ENGINEER AND THE LOCAL BUILDING DEPARTMENT.

MECHANICAL SCREW ANCHORS
PROVIDE PERIODIC INSPECTION DURING THE TESTING OF MECHANICAL SCREW ANCHORS. ALL TESTS SHALL BE IN ACCORDANCE WITH CBC CHAPTER 17, AND RESPECTIVE ICC-ES REPORT(S). THE CONTRACTOR MUST SUBMIT A TEST REPORT TO THE ENGINEER AND THE LOCAL BUILDING DEPARTMENT.

STRUCTURAL STEEL AND MISCELLANEOUS IRON
PROVIDE INSPECTION DURING THE FABRICATION AND ERECTION OF STRUCTURAL STEEL IN CONFORMANCE WITH CBC SECTIONS 1705.2, 1705.14 FOR SPRAYED FIRE-RESISTANT MATERIALS WHERE THEY OCCUR, AND 1705.12.1 WHERE PART OF THE SEISMIC FORCE-RESISTING SYSTEM(S) IN CONJUNCTION WITH AISC SEISMIC PROVISIONS FOR STRUCTURAL STEEL BUILDINGS.

WELDING
PROVIDE INSPECTION DURING THE WELDING OF STRUCTURAL STEEL IN CONFORMANCE WITH CBC SECTION 1705.2 AND 1705.12.1 WHERE PART OF THE SEISMIC FORCE-RESISTING SYSTEM(S). WELDING OF STEEL MOMENT-FRAMES AND BRACED-FRAMES SHALL BE INSPECTED PER AISC SEISMIC PROVISIONS FOR STRUCTURAL STEEL BUILDINGS, IN CONJUNCTION WITH AWS D1.8 "SEISMIC WELDING SUPPLEMENT" AND AWS D1.1 "STRUCTURAL WELDING CODE - STEEL."

SPECIAL INSPECTOR
THE SPECIAL INSPECTOR SHALL BE A QUALIFIED PERSON WHO SHALL DEMONSTRATE HIS OR HER COMPETENCE, TO THE SATISFACTION OF THE BUILDING OFFICIAL, FOR INSPECTION OF THE PARTICULAR TYPE OF CONSTRUCTION OR OPERATION REQUIRING SPECIAL INSPECTION. THE SPECIAL INSPECTOR OF RECORD MUST BE CERTIFIED BY INTERNATIONAL ACCREDITATION SERVICE (IAS), AND SHALL FURNISH A SPECIAL INSPECTION PROPOSAL OR STATEMENT OF SPECIAL INSPECTIONS BASED UPON THE APPLICABLE DESIGN DRAWINGS, SPECIFICATIONS, AND SPECIAL INSPECTION REQUIREMENTS DESCRIBED HEREIN IN CONFORMANCE WITH CBC CHAPTER 17.

DUTIES AND RESPONSIBILITES OF THE SPECIAL INSPECTOR
THE SPECIAL INSPECTOR SHALL OBSERVE THE WORK ASSIGNED FOR CONFORMANCE WITH THE APPLICABLE DESIGN DRAWINGS, SPECIFICATIONS AND SPECIAL INSPECTION PROGRAM AS DEFINED BY CBC SECTION 1704, AS WELL AS SECTION 1705.11 FOR WIND RESISTANCE AND 1705.12 FOR SEISMIC RESISTANCE. THE SPECIAL INSPECTOR SHALL FURNISH INSPECTION REPORTS TO THE BUILDING OFFICIAL, THE OWNER OR OWNER'S DESIGNATED REPRESENTATIVE, THE ARCHITECT OR PROJECT MANAGER, THE ENGINEER, THE CONTRACTOR, AND OTHER PERSONS DESIGNATED BY THE OWNER OR OWNER'S REPRESENTATIVE. ALL DISCREPANCIES SHALL BE BROUGHT TO THE IMMEDIATE ATTENTION OF THE CONTRACTOR FOR CORRECTION, AND IF UNCORRECTED TO THE PROPER DESIGN AUTHORITY AND TO THE BUILDING OFFICIAL.

THE SPECIAL INSPECTOR SHALL SUBMIT A FINAL SIGNED REPORT STATING WHETHER THE WORK REQUIRING SPECIAL INSPECTION WAS, TO THE BEST OF THE INSPECTOR'S KNOWLEDGE, IN CONFORMANCE WITH THE APPROVED PLANS AND SPECIFICATIONS AND THE APPLICABLE WORKMANSHIP PROVISIONS OF THE CBC AS REQUIRED BY CBC SECTION 1704.2.4.

DUTIES AND RESPONSIBILITIES OF THE CONTRACTOR
CONTRACTOR SHALL REVIEW AND COMPLY WITH CONTRACTOR RESPONSIBILITIES FOR SPECIAL INSPECTION AS DEFINED BY CBC SECTION 1704.4.

3 PROJECT DATA

1. PLANS AND CALCULATIONS FOR THE STRUCTURAL DESIGN WERE BASED UPON:
   - 2016 CALIFORNIA BUILDING CODE & CALIFORNIA EXISTING BUILDING CODE
   - ASCE STANDARD 7-10
   - RECORD STRUCTURAL DRAWINGS BY WARREN A. MINER & ASSOCIATES, PROJECT 347.0100, DATED MARCH 17, 2000

2. DESIGN DATA IS AS FOLLOWS:

VERTICAL

ROOF LIVE LOAD	20 PSF (REDUCIBLE)
ROOF DEAD LOAD	20 PSF (ASSUMED)
CMU WALL DEAD LOAD	80 PSF

LATERAL
SEISMIC BASE SHEAR COEFFICIENT
$V = C_s W$
$C_s = (S_{ds})/(R/I) = 0.16$
SEISMIC DESIGN CATEGORY = D
I = 1.0 (OCCUPANCY IMPORTANCE FACTOR)
R = 5.0 (SPECIAL REINFORCED MASONRY SHEARWALLS)
$S_1 = 0.43$, $F_v = 1.57$, $S_{d1} = 0.45$
$S_s = 1.14$, $F_a = 1.04$, $S_{ds} = 0.80$
SOIL SITE CLASS "D"

WIND PRESSURE: ASCE 7-10, ENVELOPE PROCEDURE (PART 2)
$P_s = \lambda K_{zt} P_{s30}$
$\lambda = 1.29$ (EXPOSURE CATEGORY C)
$K_{zt} = 1.0$
P_{s30} = VARIES PER STRUCTURE LOCATION/ELEMENT
V = 110 MPH FOR RISK CATEGORY II BUILDINGS AND OTHER STRUCTURES

FOUNDATIONS (ASSUMED MINIMUM PER CBC TABLE 1806.2)

BEARING PRESSURES	1,500 PSF (DEAD + LIVE LOADING) 2,000 PSF (DEAD + LIVE + SEISMIC/WIND LOADING)
FRICTION COEFFICIENT	0.25
EQUIVALENT PASSIVE PRESSURE	150 PCF

4 ABBREVIATIONS

AB	ANCHOR BOLT
ADJ	ADJUSTABLE
ABV	ABOVE
ADD'L	ADDITIONAL
ACI	AMERICAN CONCRETE INSTITUTE
AESS	ARCHITECTURALLY EXPOSED STRUCTURAL STEEL
AISC	AMERICAN INSTITUTE OF STEEL CONSTR.
ASTM	AMERICAN SOCIETY FOR TESTING & MATERIALS
ARCH'L	ARCHITECT(URAL)
BM	BEAM
BD	BOARD
BLK	BLOCK
BLKG	BLOCKING
BOT	BOTTOM
BLDG	BUILDING
BN	BOUNDARY NAILING
CBC	CALIFORNIA BUILDING CODE
CLG	CEILING
CLR	CLEAR
COL	COLUMN
CMU	CONCRETE MASONRY UNIT
CJ	CONSTRUCTION JOINT
CJP	COMPLETE JOINT PENETRATION
CONC	CONCRETE
CONN	CONNECTION
CONST	CONSTRUCTION
CONT	CONTINUOUS
CSK	COUNTERSINK
DEMO	DEMOLISH/DEMOLITION
DET	DETAIL
DIAG	DIAGONAL
DIA (Φ)	DIAMETER
DIM	DIMENSION
DBL	DOUBLE
DWG	DRAWING
EA	EACH
EF	EDGE FASTENING
EN	EDGE NAILING
ELEV	ELEVATION
ENGR	ENGINEER
EQ	EQUAL
EQUIP	EQUIPMENT
EXIST (E)	EXISTING
EXP	EXPANSION
FIN	FINISH
FN	FIELD NAILING
FLR	FLOOR
FTG	FOOTING
FDN	FOUNDATION
FRMG	FRAMING
FS	FAR SIDE
GA	GAUGE
GALV	GALVANIZED
GLB	GLULAM BEAM
GRD	GRADE
HD	HOLDOWN/HOT-DIPPED
HGR	HANGER
HDR	HEADER
HT	HEIGHT
HS	HIGH STRENGTH
HORIZ	HORIZONTAL
IN	INCH
ID	INSIDE DIAMETER
INT	INTERIOR
JST	JOIST
LAM	LAMINATED
LT WT	LIGHT WEIGHT
MAS	MASONRY
MAX	MAXIMUM
MB	MACHINE BOLT
MBM	METAL BUILDING MANUFACTURER
MTL	METAL
MIN	MINIMUM
(N)	NEW
NTS	NOT TO SCALE
NO OR #	NUMBER
NS	NEAR SIDE
OC	ON CENTER
OPNG	OPENING
OPP	OPPOSITE
OD	OUTSIDE DIAMETER
OWSJ	OPEN-WEB STEEL JOIST
PAF	POWER ACTUATED FASTENER
PL	PLATE
PENNY(d)	NAILS SIZE
PJP	PARTIAL JOINT PENETRATION
PLY(WD)	PLYWOOD
PSF	POUNDS PER SQUARE FOOT
PSI	POUNDS PER SQUARE INCH
PRESS	PRESSURE
PT	PRESSURE TREATED
R	RADIUS
REINF	REINFORCING
REQ'D	REQUIRED
RM	ROOM
SCHED	SCHEDULE
SHTG	SHEATHING
SHT	SHEET
SIM	SIMILAR
SLRS	SEISMIC LOAD RESISTING SYSTEM
SMF	SPECIAL MOMENT FRAME
SPEC	SPECIFICATION
SS	SELECT STRUCTURAL
SSMA	STEEL STUD MANUFACTURER'S ASSOCIATION
STGR	STAGGER(ED)
STD	STANDARD
STL	STEEL
STIFF	STIFFENER
STRUCT	STRUCTURAL
SQ	SQUARE
SYM	SYMMETRICAL
THK	THICK
TOS	TOP OF SLAB/STEEL
TO	TOP OF
UNO	UNLESS NOTED OTHERWISE
VERT	VERTICAL
WT	WEIGHT
WWF	WELDED WIRE FABRIC
WWM	WELDED WIRE MESH
WF	WIDE FLANGE
W/	WITH

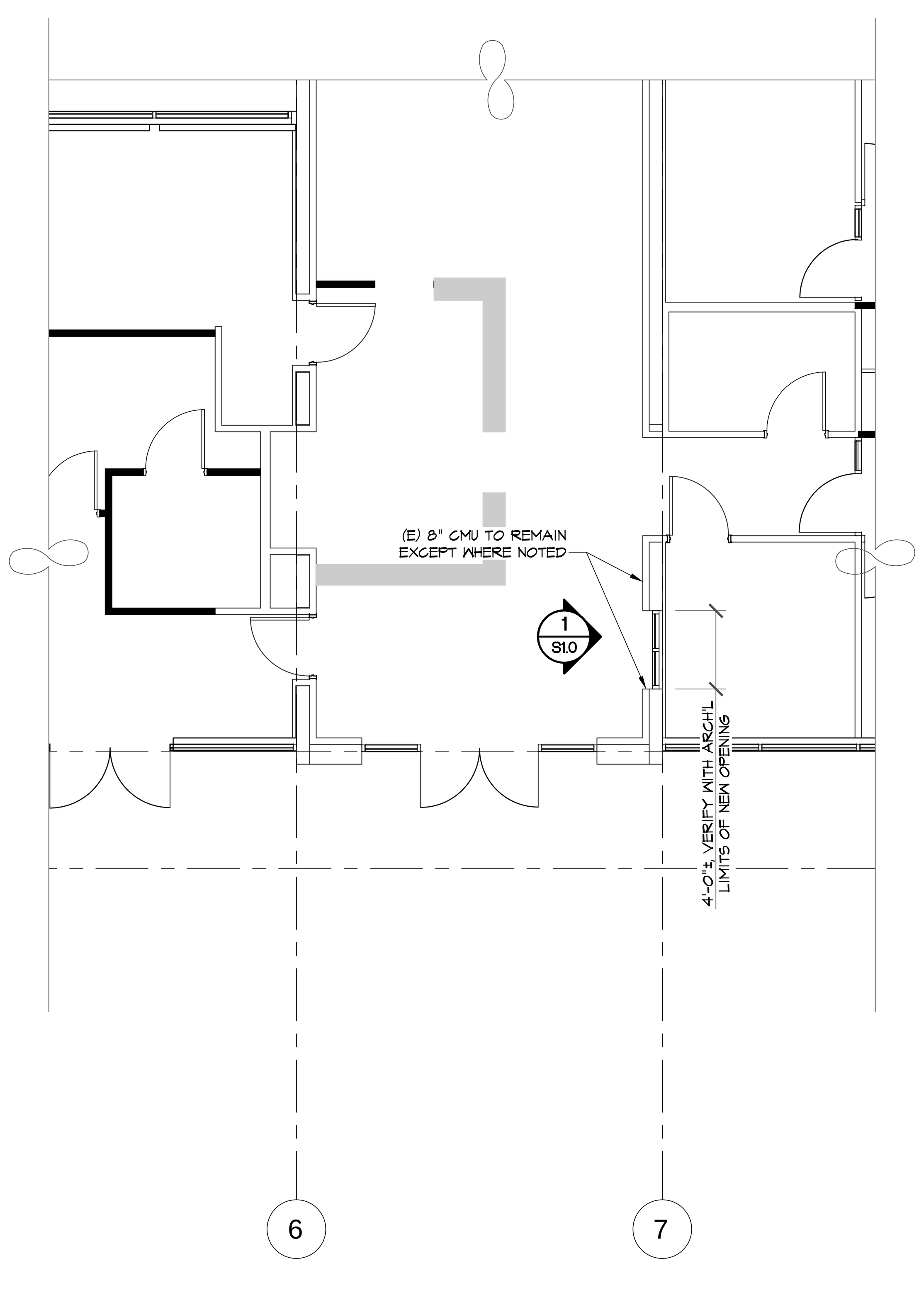

PARTIAL LAYOUT PLAN
3/16" = 1'-0"

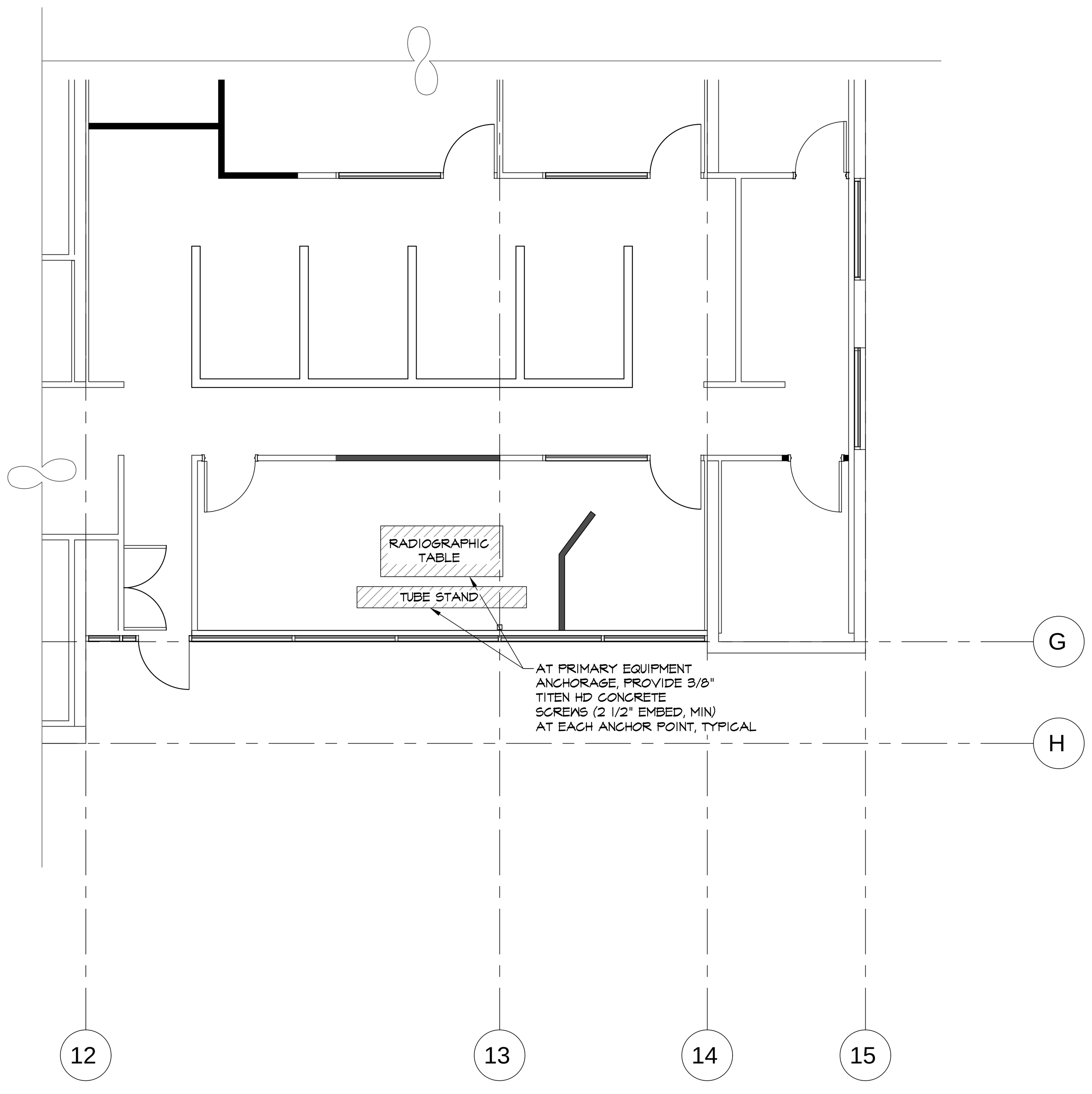

PARTIAL LAYOUT PLAN
3/16" = 1'-0"

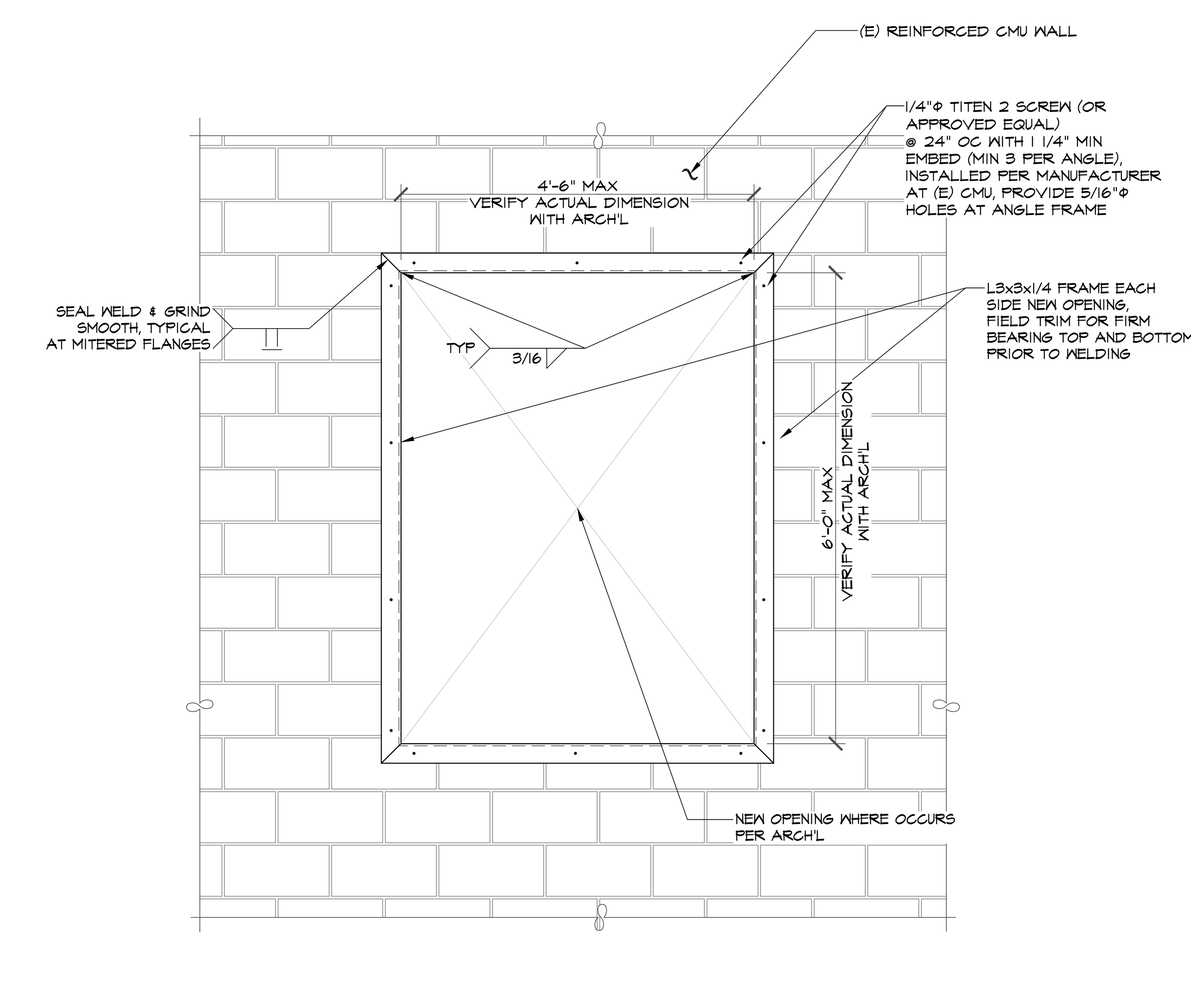

1 NEW WINDOW OPENING AT (E) CMU WALL
1/2" = 1'-0"

REGISTERED PROFESSIONAL ENGINEER BRIAN S. BARCUS S 4487 STRUCTURAL STATE OF CALIFORNIA 8/8/19
7600 North Palm Avenue
Suite 200 / Fresno, CA 93711
office 559.261.8585
fax 559.261.8580
website www.BarcusInc.com
BSE Inc.
BARCUS STRUCTURAL ENGINEERING

Klassen corporation
Architecture Construction
2021 Westwind Drive
Bakersfield, CA 93301
(661) 324-3000
(661) 324-3900 Fax
www.klassencorp.com
LICENSED ARCHITECT EDGAR L. CHILDRES C14520 REN 9-30-19 STATE OF CALIFORNIA

The above drawings and specifications and ideas, designs and arrangements represented thereby are and shall remain the property of the architect: and no part thereof shall be copied, disclosed to others or used in connection with any work or project other than the specific project for which they have been prepared and developed without the written consent of the architect. Visual contact with these drawings or specifications shall constitute conclusive evidence of acceptance of these restrictions.

Written dimensions on these drawings shall have precedence over scaled dimension: contractors shall verify and be responsible for, all dimensions and conditions on the job and this office must be notified of any variations from the dimensions and conditions shown by these drawings. Shop details must be submitted to this office for approval before proceeding with fabrication.

TENANT IMPROVEMENTS
SAN JOAQUIN VALLEY PULMONARY
5801 TRUXTUN AVE, BAKERSFIELD CA

MARK	ISSUED FOR	DATE
	OWNER SD SUBMITTAL	07/01/19
	GA SUBMITTAL	08/15/19

Project No. : 19KLC-09

STRUCTURAL SPECIFICATIONS, PARTIAL LAYOUT PLANS & DETAIL

S1.0

PLUMBING ABBREVIATIONS

℄	CENTER LINE	HDWE	HARDWARE
ℙ	PROPERTY LINE	HI,	HIGH
ø	DIAMETER or ROUND	HORIZ	HORIZONTAL
(E)	EXISTING	HP	HIGH PRESSURE
(N)	NEW	HR	HOUR
⊥	PERPENDICULAR	HT	HEIGHT
#	POUND or NUMBER	HVAC	HEATING, VENTILATING, AIR CONDITIONING
A/C	AIR CONDITIONING		
AP	ACCESS PANEL	ID	INSIDE DIAMETER (DIM.)
AD.	AREA DRAIN	INSUL	INSULATION
ADJ	ADJUSTABLE	INT	INTERIOR
ADMIN	ADMINISTRATION	IW	IRRIGATION WATER
AGGR	AGGREGATE		
AL	ALUMINUM		
APPROX	APPROXIMATE	LAV	LAVATORY
APPT.	APPOINTMENTS	LPG	LIQUID PETROLEUM GAS
ARCH.	ARCHITECTURAL		
ASB	ASBESTOS		
ASPH	ASPHALT	M	MEN
ASST	ASSISTANT	MACH	MACHINE
AUTO.	AUTOMATIC	MATL	MATERIAL
		MAX.	MAXIMUM
		MECH	MECHANICAL
BD	BOARD	MS	MOP SINK
(BF)	BELOW FINISH FLOOR	MTL	METAL
(BG)	BELOW FINISH GRADE	MFGR	MANUFACTURER
BLDG	BUILDING	MH	MANHOLE
BLKG	BLOCKING	MIN	MINIMUM
BM	BEAM	MISC	MISCELLANEOUS
BOT	BOTTOM	MONIT	MONITOR
BV	BALL VALVE		
		N	NORTH
CB	CATCH BASIN	NIC	NOT IN CONTRACT
CD	CONDENSATE DRAIN	NO. or #	NUMBER
CEM	CEMENT	NOM	NOMINAL
CER	CERAMIC	NTS	NOT TO SCALE
CI	CAST IRON		
CJ	CONTROL JOINT		
CLG	CEILING	OA	OVERALL
CLKG	CAULKING	OAV	OXYGEN, AIR & VACUUM
CLR	CLEAR	OC	ON CENTER
CO	CLEANOUT	OVHD	OVERHEAD
COL	COLUMN	OX.	OXYGEN
COMP	COMPRESSED		
CONC	CONCRETE		
CONF	CONFERENCE	PTN	PARTITION
CONN.	CONNECTION	PHYS	PHYSICAL
CONST	CONSTRUCTION	PR	PRESSURE REGULATOR
CONT	CONTINUOUS	PVC	POLY-VINYL CLORIDE PIPE
CORR	CORRIDOR	PLAS	PLASTER
COTG	CLEANOUT TO GRADE	PLWD	PLYWOOD
CP	CIRCULATING PUMP	POC	POINT OF CONNECTION
CKS	COUNTERSUNK	PREFAB	PREFABRICATED
CTR	CENTER	PREP	PREPARATION
CV	CHECK VALVE	PT	PLUGGED TEE
		PW	PROCESSED WATER
DBL	DOUBLE		
DCW	DOMESTIC COLD WATER	R	RISER
DEPT	DEPARTMENT	RAD.	RADIUS
DET	DETAIL	RO	ROOF DRAIN
DF	DRINKING FOUNTAIN	REF	REFERENCE
DHW	DOMESTIC HOT WATER	REINF	REINFORCED
DHWR	DOMESTIC HOT WATER RETURN	REQD	REQUIRED
DIA or ø	DIAMETER	RM	ROOM
DIR	DIRECTOR	RWL	RAINWATER LEADER
DN	DOWN		
DR	DOOR		
DS	DOWNSPOUT	S	SINK or SOUTH
DSP	DRY STANDPIPE	SA	WATER HAMMER ARRESTER
DTW	DOMESTIC TEMPERED WATER	SB	SPLASH BLOCK
DWG	DRAWING	SCHD	SCHEDULE
		SDL	STORM DRAIN LINE
		SECT.	SECTION
E	EAST	SH	SHOWER
EA	EACH	SHT	SHEET
EDF	ELECTRIC DRINKING FOUNTAIN	SIM	SIMILAR
ELEC	ELECTRICAL	SL	SPRINKLER LINE
ELEV	ELEVATION	SPEC	SPECIFICATION
EMER	EMERGENCY	SOV	SHUT-OFF VALVE
ENCL	ENCLOSURE	SS	SERVICE SINK
EO	ELECTRICAL OUTLET	SST	STAINLESS STEEL
EP	ELECTRICAL PANEL	STD	STANDARD
EQ	EQUAL	STL	STEEL
EQUIP	EQUIPMENT	STOR	STORAGE
(E)	EXISTING	STRUCT	STRUCTURAL
EXP	EXPANSION	SUPV	SUPERVISOR
EXPO.	EXPOSED	SUSP	SUSPENDED
EXT	EXTERIOR	S&W	SOIL & WASTE
		TA	TRAP ARM
FA	FIRE ALARM	TC	TOP OF CURB
FCO	FLOOR CLEANOUT	TEL	TELEPHONE
FD	FLOOR DRAIN	TER	TERRAZZO
FDN	FOUNDATION	THK	THICK
FE	FIRE EXTINGUISHER	TOC	TOP OF CONCRETE
FEC	FIRE EXTINGUISHER CABINET	TP	TRAP PRIMER
FH	FIRE HYDRANT	TRANS	TRANSCRIPTION
FHC	FIRE HOSE CAB.	TREAT.	TREATMENT
FHMS	FLAT HEAD METAL SCREW	TYP	TYPICAL
FIN.	FINISH	TV	TEMPERING VALVE
FL	FLOOR		
FLASH.	FLASHING		
FM	FIRE MAIN	UL	UNDERWRITERS LABORATORIES
FOC	FACE OF CONCRETE	UON	UNLESS OTHERWISE NOTED
FOF	FACE OF FINISH	UR	URINAL
FR	FRAME		
FRPF	FIREPROOFING		
FS	FLOOR SINK	V	VENT
FSH	FIRE SPRINKLER HEAD	VA	VALVE
FSL	FIRE SPRINKLER LINE	VC	VITRIFIED CLAY
FTR	FLUE THRU ROOF	VTR	VENT THRU ROOF
FUNC	FUNCTION	VO	VENT OFFSET
FURR	FURRING		
FUT	FUTURE		
		W	WASTE LINE
		W/	WITH
GA	GAUGE	WC	WATER CLOSET
GALV	GALVANIZED	WCO	WALL CLEANOUT
GC	GAS COCK	WH	WATER HEATER
GEN	GENERAL	WHA	WATER HAMMER ARRESTOR
GI	GALVANIZED IRON	W/O	WITHOUT
GL	GLASS	WMF	WASHING MACHINE FITTING
GR	GRADE	WP	WATERPROOF
GRD	GROUND	WT	WEIGHT
G	GAS LINE		
GW	GREASE WASTE		
		YD	YARD

SYMBOLS

- BRANCH TOP CONNECTION
- BRANCH BOTTOM CONNECTION
- CAPPED PIPE
- CHECK VALVE
- CLEANOUT
- CLEANOUT TO GRADE
- CIRCULATING PUMP
- CONDENSATE DRAIN
- CONDENSATE "P" TRAP
- DOMESTIC COLD WATER
- DOMESTIC HOT WATER
- DOMESTIC HOT WATER RETURN
- EXISTING WASTE OR SOIL & WASTE
- FIRE HYDRANT
- FLOOR CLEANOUT
- FLOOR SINK
- GAS
- GAS COCK
- GAS PRESSURE REGULATOR
- GATE VALVE
- HOSE BIBB
- PIPE RISER (ELBOW)
- PIPE DROP (ELBOW)
- PIPE DROP OR RISER
- POINT OF CONNECTION
- PROCESS WASTE
- SHUT-OFF VALVE
- SHUT-OFF VALVE IN YARDBOX
- SOIL & WASTE
- TRAP PRIMER
- VENT
- VENT OFFSET
- VENT THRU ROOF
- WALL CLEANOUT
- WASTE
- WATER HAMMER

GENERAL PLUMBING NOTES

PART 1 – GENERAL

1.1 SUMMARY

A. LABOR, MATERIALS, TOOLS, AND SERVICES FOR A COMPLETE INSTALLATION OF EQUIPMENT AND SYSTEM CONTAINED IN THE CONTRACT DOCUMENTS.

B. PRINCIPAL FEATURES OF THE WORK INCLUDED ARE:

1. PLUMBING SYSTEM AND RELATED PIPING INSULATION.
2. DOMESTIC WATER PIPING, VALVES, CONNECTIONS AND RELATED PIPING INSULATION.
3. LIMITED AREA FIRE PROTECTION (SPRINKLER SYSTEMS)
4. EXCAVATING AND BACKFILLING FOR MECHANICAL WORK; COORDINATE WITH APPROPRIATE TRADE.
5. ANCHOR BOLTS, SLEEVES, SUPPORTS AND SIMILAR ITEMS TO BE BUILT INTO CONCRETE OR MASONRY.
6. PREPARATION AND SUBMITTAL OF SHOP DRAWING AND PRODUCT DATA.
7. MAINTAINING A RECORD SET OF BLUE LINE PRINTS AND MAKING THEM TO INDICATE LOCATIONS OF CONCEALED ITEMS, AND DEVIATIONS MADE TO SUIT CONDITIONS AND PRODUCTION OF MECHANICAL AS-BUILT (RECORD) DRAWINGS.

1.2 JOB CONDITIONS.
A. SUBMITTAL OF BID IMPLIES BIDDER HAS READ APPLICABLE PARAGRAPHS OF THE SPECIFICATIONS AND WILL BE BOUND BY THEIR CONDITIONS.

1.3 LOCAL CONDITIONS

A. CONFORM WITH LOCAL CONDITIONS. COORDINATE WITH LOCAL UTILITIES ON SIZE OF UTILITY SERVICE.

1.4 INTENT

A. THE CONTRACT DOCUMENTS (DRAWINGS AND SPECIFICATIONS) DESCRIBE THE PLUMBING WORK OF THIS PROJECT ANY ITEMS MENTIONED IN ONE PART SHALL BE AS BINDING AS THOUGH MENTIONED IN BOTH.

B. THE CONTRACT DOCUMENTS FORM A GUIDE FOR A COMPLETE PLUMBING INSTALLATION. WHERE AN ITEM IS REASONABLY NECESSARY BUT NOT SPECIFICALLY MENTIONED, SUCH AS PIPING OFFSETS, DRAINS, ETC., FOR A COMPLETE SYSTEM, PROVIDE SAME.

C. PLUMBING LAYOUTS INDICATED ON DRAWINGS ARE DIAGRAMMATIC ONLY, EXACT LOCATIONS OF PIPES, AND EQUIPMENT SHALL BE GOVERNED BY THE DRAWINGS OF RELATED TRADES.

1.5 DEVIATIONS

A. NO DEVIATIONS FROM SPECIFICATIONS AND DRAWINGS SHALL BE MADE WITHOUT FULL KNOWLEDGE AND WRITTEN CONSENT OF CONSTRUCTION MANAGER.

B. SHOULD CONTRACTOR FIND, DURING PROGRESS OF WORK, CONDITIONS WHICH DICTATE A MODIFICATION OF ANY PARTICULAR REQUIREMENTS, REPORT SUCH ITEM PROMPTLY FOR DECISION OF INSTRUCTIONS.

1.6 QUALITY ASSURANCE

A. COMPLY WITH APPLICABLE LOCAL, STATE AND FEDERAL CODES.

B. COMPLY WITH APPLICABLE REQUIREMENTS OF RECOGNIZED INDUSTRY ASSOCIATIONS WITH PROMULGATE STANDARDS FOR THE VARIOUS TRADES. (SEE INDIVIDUAL SECTIONS OF DIVISION 15)

C. EMPLOY ONLY QUALIFIED JOURNEYMEN FOR THIS WORK. EMPLOY COMPETENT, QUALIFIED PLUMBERS TO SUPERVISE THE WORK.

1.7 CODES AND STANDARDS

A. PERFORM WORK SPECIFIED IN DIVISION 15 IN ACCORDANCE WITH THE APPLICABLE CODES AND STANDARDS LISTED BELOW, AND SUCH STANDARDS THAT MAY BE SPECIFIED IN OTHER SECTIONS. WHEN THESE SPECIFICATIONS ARE MORE STRINGENT, THEY TAKE PRECEDENCE. IN CASE OF CONFLICT, OBTAIN A DECISION FROM THE PLUMBING ENGINEER.

1. NFPA 54: NATIONAL FUEL AND GAS CODE.
3. NFPA 101: LIFE SAFETY CODE
4. APPLICABLE STATE BUILDING CODE.
5. NATIONAL STANDARD PLUMBING CODE (OR APPLICABLE STATE PLUMBING CODE).
6. HANDICAPPED CODE ANSI A117.1 AND ADA
7. APPLICABLE STATE ENERGY CODE.
8. AGA: AMERICAN GAS ASSOCIATION.
9. ANSI: AMERICAN NATIONAL STANDARDS INSTITUTE.
10. ASTM: AMERICAN SOCIETY FOR TESTING AND MATERIALS.
11. MSS: MANUFACTURER'S STANDARDIZATION SOCIETY OF THE VALVE AND FITTING INDUSTRY.
12. NEMA: NATIONAL ELECTRICAL MANUFACTURER'S ASSOCIATION
13. NFPA: NATIONAL FIRE PROTECTION ASSOCIATION.
14. UL: UNDERWRITERS' LABORATORIES. INC.

1.8 COORDINATION

A. CAREFULLY EXAMINE SPECIFICATIONS AND DRAWINGS TO BE THOROUGHLY FAMILIAR WITH ITEMS WHICH REQUIRE PLUMBING AND COORDINATION.

B. COORDINATE WITH OTHER DIVISIONS TO LEAVE PROPER CHASES AND OPENINGS. PLACE OUTLETS, ANCHORS, SLEEVES, AND SUPPORTS PRIOR TO POURING CONCRETE OF INSTALLATION OF MASONRY WORK.

1.9 SUBMITTALS

A. SUBMITTALS ARE ONLY REQUIRED FOR SPECIFIC ITEMS OF EQUIPMENT OR MATERIAL LISTED IN INDIVIDUAL SECTIONS OF THESE SPECIFICATIONS.

B. WITHIN 15 DAYS AFTER AWARD OF CONTRACT FOR THIS WORK, SUBMIT A LIST OF PROPOSED MANUFACTURERS (OF EQUIPMENT OR MATERIAL TO BE USED) FOR APPROVAL. SUBMIT THIS LIST BEFORE SUBMITTAL OF SHOP DRAWINGS AND PRODUCT DATA, AND OBTAIN APPROVAL BEFORE SUBMITTING REQUIRED ITEMS.

C. SHOP DRAWINGS (NOT REQUIRED FOR OWNER FURNISHED EQUIPMENT).

1.10 DELIVERY AND STORAGE

A. INSOFAR AS POSSIBLE, DELIVER ITEMS IN MANUFACTURER'S ORIGINAL UNOPENED PACKAGING. WHERE THAT IS NOT PRACTICAL, COVER ITEMS WITH PROTECTIVE MATERIALS TO KEEP THEM FROM BEING DAMAGED. USE CARE IN LOADING, TRANSPORT, UNLOADING, AND STORAGE TO KEEP ITEMS FROM BEING DAMAGED.

1.11 FIRE RATINGS

A. MATERIALS USED ANYWHERE IN THE WORK MUST HAVE NFPA RATINGS AS FOLLOWING:

1. FLAME SPREAD – NOT OVER 25
2. SMOKE DEVELOPED – NOT OVER 50
3. FUEL CONTRIBUTED – NOT OVER 25

B. MATERIALS SHALL BE "SELF EXTINGUISHING".

A. OBTAIN, PAY FOR, AND DELIVER PERMITS, CERTIFICATION OF INSPECTION, AND OTHER SUCH ITEMS REQUIRED BY THE AUTHORITIES HAVING JURISDICTION. DELIVER CERTIFICATION TO THE CONSTRUCTION MANAGER PRIOR TO FINAL ACCEPTANCE OF THE WORK. AN INSPECTION CERTIFICATE FOR EACH CLASS OF WORK REQUIRING INSPECTION MUST BE SUBMITTED PRIOR TO OR WITH THE FINAL PAYMENT INVOICE. THE RESPONSIBLE TRADE CONTRACTOR MUST MAKE APPLICATION FOR THE INSPECTION, COORDINATE SAME AND PAY THE REQUIRED INSPECTION FEE.

1.13 EXTENDED WARRANTIES

A. WORK FURNISHED UNDER THE CONTRACT SHALL BE WARRANTED AGAINST DEFECTS IN WORKMANSHIP AND (CONTRACTOR FURNISHED) MATERIALS FOR A PERIOD OF NOT LESS THAT ONE (1) YEAR, OR AS OTHERWISE SPECIFIED, FROM THE DATE OF FINAL ACCEPTANCE OF THE INSTALLATION, DEFECTS OF WORKMANSHIP DEVELOPING DURING THIS PERIOD SHALL BE REMEDIED, AND DEFECTIVE MATERIAL REPLACED, WITHOUT ADDITIONAL COST. WHEN DEFECTS IN A TRADE CONTRACTOR'S WORK CAUSES DAMAGE TO THE WORK OF THE OTHER TRADE CONTRACTORS, SUCH DAMAGE SHALL BE REPAIRED BY THE TRADE CONTRACTOR CAUSING DAMAGE AND WORK RESTORED TO ITS ORIGINAL CONDITION, AT THE EXPENSE OF THE TRADE CONTRACTOR THAT CAUSED THE DAMAGE.

PART 2 – PRODUCTS

2.1 MATERIALS AND EQUIPMENT

A. WITHIN THE CONTRACT DOCUMENTS RELATING TO PLUMBIMG WORK, MANUFACTURER'S NAMES, CATALOG NUMBERS, AND OTHER PROPRIETARY REFERENCES TO MATERIALS AND EQUIPMENT ARE MADE. SUCH REFERENCES ARE MADE TO ESTABLISH THE STANDARDS OF QUALITY AND TYPE REQUIRED, AND NOT TO LIMIT COMPETITION. ACCEPTABLE MANUFACTURER'S OF COMPETITIVE PRODUCTS ARE LISTED IN APPLICABLE SECTIONS AS "APPROVED EQUALS". REASONABLE REQUESTS FOR SUBSTITUTION OR ADDITIONS TO "APPROVED EQUALS" WILL BE CONSIDERED, BUT THE MECHANICAL ENGINEER WILL BE THE SOLE JUDGE OF ACCEPTABILITY OF ITEMS PROPOSED AS SUBSTITUTES.

B. MATERIALS AND EQUIPMENT USED IN CARRYING OUT THESE SPECIFICATIONS SHALL BEAR UL OR OTHER RECOGNIZED TESTING LABORATORY LABEL WHEN SUCH LABELS ARE AVAILABLE.

PART 3 – EXECUTION

3.1 LOCATIONS

A. PLUMBING LAYOUTS INDICATED ON DRAWINGS ARE DIAGRAMMATIC. EXACT LOCATIONS OF PIPES, AND EQUIPMENT MAY VARY BECAUSE OF CONFLICTS WITH WORK OF OTHER TRADES. WORK OUT CONFLICTS WHERE RELOCATION'S WILL NOT AFFECT OPERATION OR APPEARANCE OF SYSTEMS.

B. LOCATE EQUIPMENT REQUIRING PERIODIC SERVICING SO THAT IT IS READILY ACCESSIBLE. DO NOT BACK UP SERVICE SIDES TO WALLS, NOR PLACE IT TOO CLOSE TO OTHER EQUIPMENT TO MAKE SERVICE IMPRACTICAL. EQUIPMENT SERVICE CLEARANCE SHALL MEET MINIMUM ACCEPTABLE DISTANCE AS RECOMMENDED BY EQUIPMENT MANUFACTURER.

3.2 UTILITIES EXCAVATING AND BACKFILLING

A. PERFORM TRENCHING, EXCAVATING, BACKFILLING FOR PLUMBING WORK IN ACCORDANCE WITH THE APPROPRIATE SECTIONS AND AS SET FORTH BELOW

1. PERFORM WORK NECESSARY FOR INSTALLATION OF PLUMBING UTILITIES.
2. DEPTH OF EXCAVATION TO PROVIDE A MINIMUM OF 3' ABOVE TOP OF PIPE. EXCAVATION TO BE CARRIED TO A DEPTH OF AT LEAST 6" BELOW BOTTOM OF PIPE ELEVATION. FILL BELOW PIPE (6"), AROUND PIPE, AND A MINIMUM OF 12" ABOVE PIPE WIT SAND OR CLASS "B" CRUSHED STONE TAMPED FIRM AND EVEN. SEPARATE TOPSOIL DURING EXCAVATION. FINAL LAYER OR DIRT (12" MINIMUM) TO BE TOPSOIL. TRENCHES TO BE AT LEAST 18" WIDER THAN PIPE WITH BATTER BOARDS PLACED EVERY 25'. BACKFILLING SHALL BE DONE TO EXCLUDE USE OF ROCK OR STONE ABOVE SAND OR CRUSHED STONE.

3.3 CUTTING AND PATCHING

A. REPAIR OR REPLACE ROUTINE DAMAGE CAUSED BY CUTTING IN PERFORMANCE OF CONTRACT.

B. PERFORM REPAIRS WITH MATERIALS WHICH MATCH EXISTING AND INSTALL IN ACCORDANCE WITH THE APPROPRIATE SECTION OF THESE SPECIFICATIONS OR THE BEST STANDARDS OF THE INDUSTRY.

3.4 CONNECTION TO EQUIPMENT

A. CONNECT OR INSTALL EQUIPMENT SHOWN ON MECHANICAL DRAWINGS THAT REQUIRE PLUMBING

1. ROUGH – IN PIPING AND CONNECT EQUIPMENT
2. PROVIDE PIPING, SHUTOFF VALVES, AND UNIONS REQUIRED FOR A COMPLETE INSTALLATION,

3.5 SERVICE OF SYSTEM

A. EMPLOY COMPETENT, QUALIFIED PERSONNEL IN OPERATION OF THE EQUIPMENT.

B. PROVIDE FOR PROPER OPERATION AND CLEANLINESS.

END OF SECTION

PART 1 – GENERAL SECTION 2
1.1 SCOPE OF WORK PLUMBING

A. FURNISHING OF ALL LABOR, MATERIALS, TOOLS, TRANSPORTATION, SERVICE, AND RELATED ITEMS NECESSARY TO COMPLETE THE INSTALLATION OF THE PLUMBING SYSTEM AS ILLUSTRATED ON THE DRAWING AND AS INCLUDING BUT NOT LIMITED TO THE FOLLOWING:

1. HOT & COLD WATER SYSTEM WITH COMPLETE CONNECTIONS FROM METER TO ALL PLUMBING FIXTURES & EQUIPMENT REQUIRING WAWTER CONNECTIONS
2. SOIL, WASTE, VENT AND CONDENSATE SYSTEM LINES INSIDE AND OUTSIDE THE BUILDING.
3. TRENCHING AND BACKFILLING.
4. FINAL PLUMBING CONNECTIONS TO HEATING AND AIR CONDITIONING EQUIPMENT.
5. GAS PIPING TO HEATING, WATER HEATERS AND ALL OTHER GAS BURNING EQUIPMENT.

PART 2 – PRODUCTS

2.1 DESCRIPTION

A. SOIL, WASTE, AND VENT PIPING BELOW FLOOR TO 5'-0" OUTSIDE BUILDING: STANDARD WEIGHT COATED CAST IRON SOIL PIPE AND CAST IRON/ NEOPRENE GASKET FITTINGS. YARD PIPING, PIPE AND FITTINGS. A.B.S. OR P.V.C. SCHEDULE 40 PIPE AND FITTINGS MAY BE INSTALLED, AS APPROVED BY LOCAL AUTHORITY IN CONCEALED LOCATIONS ONLY. EXCEPTION: ALL SOIL, WASTE & VENTS LOCATED WITHIN A FIRE RATED WALL SHALL BE METALLICS.(STEEL, CAST IRON ECT., NO PVC) IT SHALL BE THE RESPONSIBLITY OF THE PLUMBER TO VERIFY ALL FIRE RATED WALLS & CONSTRUCTION AS SHOWN ON THE ARCHITECTURAL DRAWINGS & COORDINATE WITH THE GENERAL CONTRACTOR

B. SOIL, WASTE AND VENT PIPING ABOVE FLOOR: STANDARD WEIGHT COATED CAST IRON PIPE AND STAINLESS STEEL/ NEOPRENE GASKET FITTING, OR A.B.S. OR P.V.C. SCHEDULE 40, AS APPROVED BY LOCAL AUTHORITY IN CONCEALED LOCATIONS.

C. HOT & COLD WATER PIPING ABOVE FLOOR: TYPE "L" COPPER, HARD DRAWN. BELOW GROUND OUTSIDE OF BUILDING: TYPE "K" SOFT DRAWN COPPER TUBING WITH OUT JOINTS.

D. CONDENSATE DRAIN PIPING: TYPE "M" COPPER WITH 95-5 TIN ANTIMONY SOLDER AND WROUGH COPPER FITTINGS.

E. INDIRECT WASTE PIPING: TYPE "M" COPPER WITH 95-5 TIN ANIMONY SOLDER AND WROUGHT COPPER FITTINGS OR P.V.C. SCHEDULE 40, AS APPROVED BY LOCAL AUTHORITY.

F. UNDERGROUND GAS PIPING: SCHEDULE 40 BLACK STEEL PIPE WITH LONG RADIUS STEEL WELDING FITTINGS INCLUDING CATHOLIC PROTECTION OR POLYETHYLENE AS APPROVED BY LOCAL GAS COMPANY AND AUTHORITY HAVING JURISDICTION. INSTALLATION OF GAS SERVICE PIPING IN VENTED CONDUIT AND MEETING WITH THE LOCAL GAS COMPANY'S APPROVAL.

G. GAS PIPING ABOVE GROUND: SCHEDULE 40 BLACK STEEL WITH 125 POUND BLACK MALLEABLE IRON SCREWED FITTINGS. GAS PIPING COMPOUND AT JOINTS IN COMPLIANCE WITH NFPA BULLETIN #45 AND LOCAL APPLICABLE CODES AND SUITABLE FOR NATURAL GAS SERVICE. INSTALL MOISTURE TRAPS ON HVAC UNITS, WATER HEATERS, AND KITCHEN EQUIPMENT. 4"GAS LINE TO BE WELDED AND WELDED BY CERTIFIED WELDER.

H. STORM PIPING BELOW GROUND: STANDARD WEIGHT COATED CAST IRON PIPE AND STAINLESS STEEL/ NEOPRENE GASKET FITTING, OR A.B.S. OR P.V.C. SCHEDULE 40, AS APPROVED BY LOCAL AUTHORITY IN CONCEALED LOCATIONS.

I. STORM PIPING ABOVE GROUND: STANDARD WEIGHT COATED CAST IRON PIPE AND STAINLESS STEEL/ NEOPRENE GASKET FITTING, OR A.B.S. OR P.V.C. SCHEDULE 40, AS APPROVED BY LOCAL AUTHORITY.

J. TRAPS AND VENTS FOR SERVICE SINK: A.B.S. OR P.V.C. SCHEDULE 40, AS APPROVED BY LOCAL AUTHORITY.

2.2 INSULATION

A. INSULATE ALL HOT AND COLD WATER COPPER PIPING WITH AT LEAST 1/2" THICK FOAM RUBBER OR FOAM PLASTIC TYPE PIPE INSULATION

2.3 FIXTURES

A. ALL FIXTURES: AS INDICATED ON DRAWINGS WITH EQUAL PRODUCTS FURNISHED BY AMERICAN STANDARD, KOHLER, ELJER OR EQUAL.

2.4 CLEANOUTS, FLOOR DRAINS, FLOOR SINKS, AND ROOF DRAINS.

A. ALL ACCESSORIES, AS INDICATED ON DRAWING WITH EQUAL PRODUCTS FURNISHED BY WADE, JOSAM, OR ZURN BEING ACCEPTABLE.

2.5 EQUIPMENT

A. SHUTOFF VALVES UNDERNEATH LAVATORIES, TANK TYPE WATER CLOSETS, AND KITCHEN EQUIPMENT WITH CHROME PLATED ANGLE STOP VALVES WITH CHROME PLATED ESCUTCHEON PLATES.

B. HOSE BIBBS – AS SCHEDULED ON DRAWINGS.

C. VACUUM BREAKERS – AS SCHEDULED ON DRAWINGS.

D. BACKFLOW PREVENTERS – AS SCHEDULED ON DRAWINGS.

E. GAS COCK – PLUG VALVE IRON BODY, BRONZE TAPERED PLUG, LUBRICATED, THREADED ENDS. RATED FOR 200 CWP, AGA AND UL LISTED.

PART 3 – INSTALLATION

3.1 PIPING

A. RUN ALL PIPING CONCEALED EXCEPT WHERE OTHERWISE INDICATED ON DRAWINGS.

B, INSTALL VALVES TRAPS CLEANOUT AND OTHER APPARATUS IN AN EASILY ACCESSIBLE LOCATION

C. INSTALL SOIL, WASTE VENT OFFSETS AND CONDENSATE DRAINS WITH A MINIMUM UNIFORM GRADE OF ONE QUARTER INCH TO THE FOOT.

D. MAINTAIN HOT AND COLD WATER LINES AT LEAST 6 INCHES APART WHERE PIPING IS PARALLEL.

E. PROVIDE ESCUTCHEON PLATES WHERE ALL PIPES PASS THROUGH A FINISHED WALL.

3.2 PLUMBING FIXTURES

A. FURNISH AND INSTALL ALL PLUMBING FIXTURES COMPLETE WITH ALL EQUIPMENT FITTINGS, TRIMMING, AND ACCESSORIES.

B. ALL FIXTURES: GRADE A, WHITE.

C. EXPOSED PIPING TO FIXTURES: A PRODUCT OF THE FIXTURE MANUFACTURE.

D. PROVIDE STOPS AS MANUFACTURED BY THE FIXTURE MANUFACTURER, WITH METAL – TO – SEAT FOR ALL FIXTURES AND EQUIPMENT.

3.3 TEST

A. THE PLUMBING SYSTEM AND ASSOCIATED SYSTEM IS SUBJECT TO FINAL APPROVAL OF THE OWNER'S REPRESENTATIVE AND CODE AUTHORITIES HAVING JURDICTION. PERFORM ALL TESTS REQUIRED TO SHOW CODE COMPLIANCE AS DIRECTED.

3.4 CLEANING AND PROTECTION

A. AFTER THE PLUMBING PIPING HAS BEEN INSTALLED, INSPECTED, AND APPROVED, FLUSH THE PIPING SYSTEM TO REMOVED ANY FOREIGN MATTER FROM THE PIPES.

3.5 MAINTENANCE

A. MAINTAIN ALL PARTS OF THE PLUMBING FIXTURES AND ASSOCIATED EQUIPMENT THROUGHOUT THE GUARANTEE

END OF SECTION

Klassen corporation
Architecture Construction
2021 Westwind Drive
Bakersfield, CA 93301
(661) 324-3000
(661) 324-3900 Fax
www.klassencorp.com

REGISTERED PROFESSIONAL ENGINEER
FRANK J. CARTER
No. 21199
MECHANICAL
STATE OF CALIFORNIA

The above drawings and specifications and ideas, designs and arrangements represented thereby are and shall remain the property of the architect and no part thereof shall be copied, disclosed to others or used in connection with any work or project other than the specific project for which they have been prepared and developed without the written consent of the architect. Visual contact with these drawings or specifications shall constitute conclusive evidence of acceptance of these restrictions.
Written dimensions on these drawings shall have precedence over scaled dimension. contractors shall verify and be responsible for all dimensions and conditions on the job and this office must be notified of any variations from the dimensions and conditions shown by these drawings. Shop details must be submitted to this office for approval before proceeding with fabrication.

TENANT IMPROVEMENTS
SAN JOAQUIN VALLEY PULMONARY
5801 TRUXTUN AVE, BAKERSFIELD CA 933309

DATE	ISSUED FOR	MARK
07/01/19	OWNER SD SUBMITTAL	△
07/31/19	OWNER DD SUBMITTAL	△
08/15/19	OWNER CD SUBMITTAL	△
		△
		△
		△
		△

Project No. : C19-148

PLUMBING GENERAL NOTES

P1.0

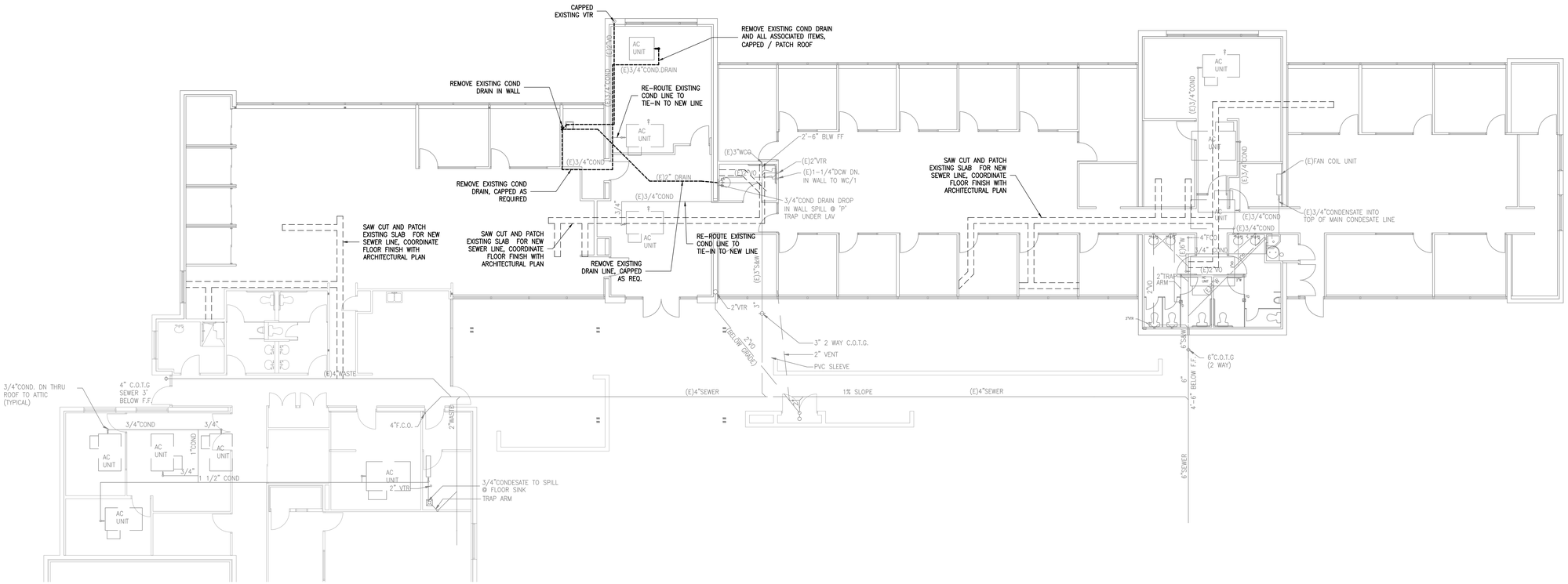

PLUMBING DEMOLITION PLAN - SEWER

SCALE: 1/8" = 1'-0"

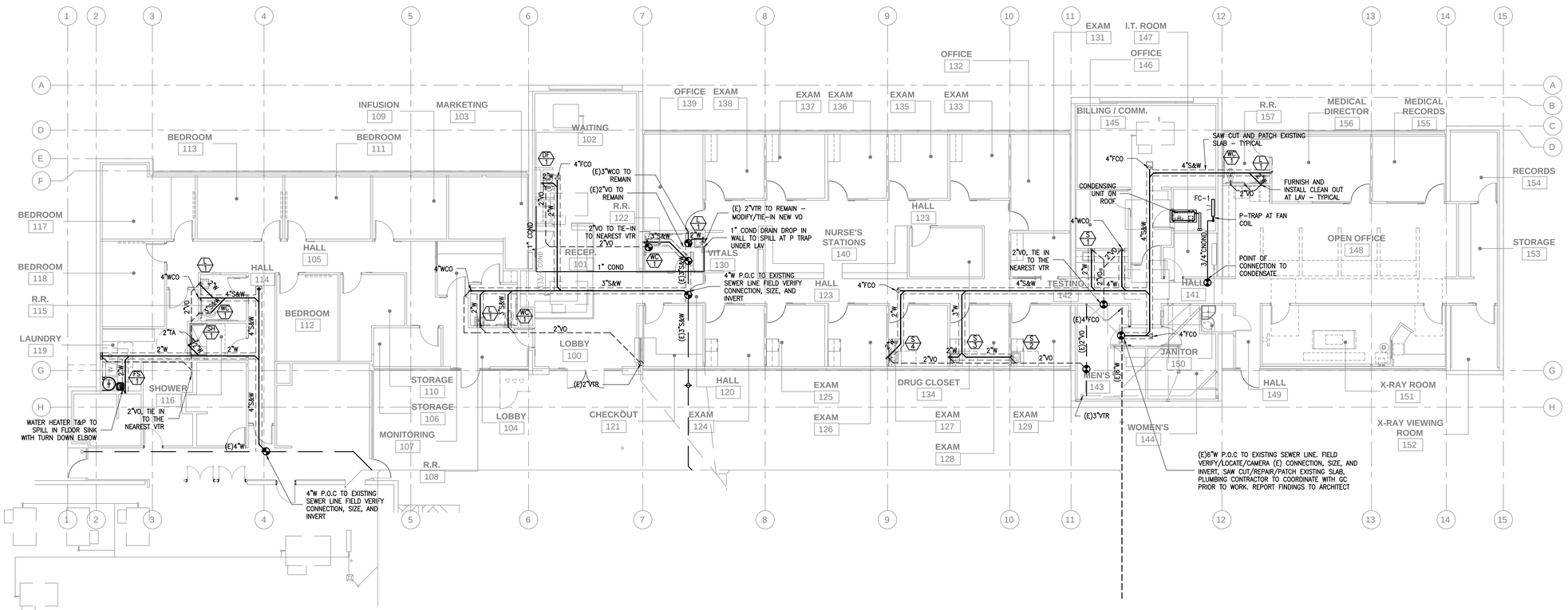

PLUMBING PLAN - SEWER / DRAIN / VENT

SCALE: 1/8" = 1'-0"

Klassen corporation
Architecture Construction
2021 Westwind Drive
Bakersfield, CA 93301
(661) 324-3000
(661) 324-3900 Fax
www.klassencorp.com

REGISTERED PROFESSIONAL ENGINEER FRANK J. CARTER No. 21190 MECHANICAL STATE OF CALIFORNIA

The above drawings and specifications and ideas, designs and arrangements represented thereby are and shall remain the property of the architect and no part thereof shall be copied, disclosed to others or used in connection with any work or project other than the specific project for which they have been prepared and developed without the written consent of the architect. Visual contact with these drawings or specifications shall constitute conclusive evidence of acceptance of these restrictions.

Written dimensions on these drawings shall have precedence over scaled dimension. contractors shall verify and assume responsibility for all dimensions and conditions on the job and this office must be notified of any variations from the dimensions and conditions shown by these drawings. Shop details must be submitted to this office for approval before proceeding with fabrication.

TENANT IMPROVEMENTS
SAN JOAQUIN VALLEY PULMONARY
5801 TRUXTUN AVE, BAKERSFIELD CA 933309

DATE	ISSUED FOR	MARK
07/01/19	OWNER SD SUBMITTAL	△
07/31/19	OWNER DD SUBMITTAL	△
08/15/19	OWNER CD SUBMITTAL	△
		△
		△
		△
		△

Project No. : C19-148

PLUMBING PLANS

P2.0

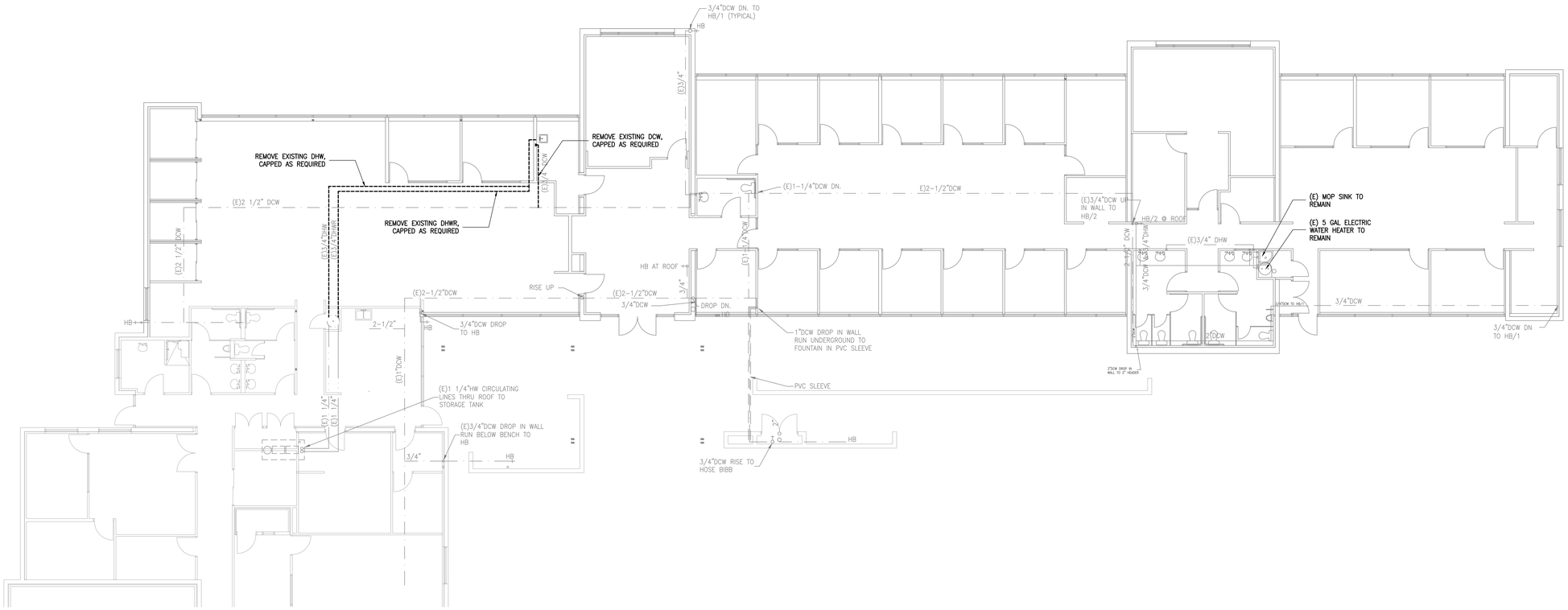

PLUMBING DEMOLITION PLAN - WATER

SCALE: 1/8" = 1'-0"

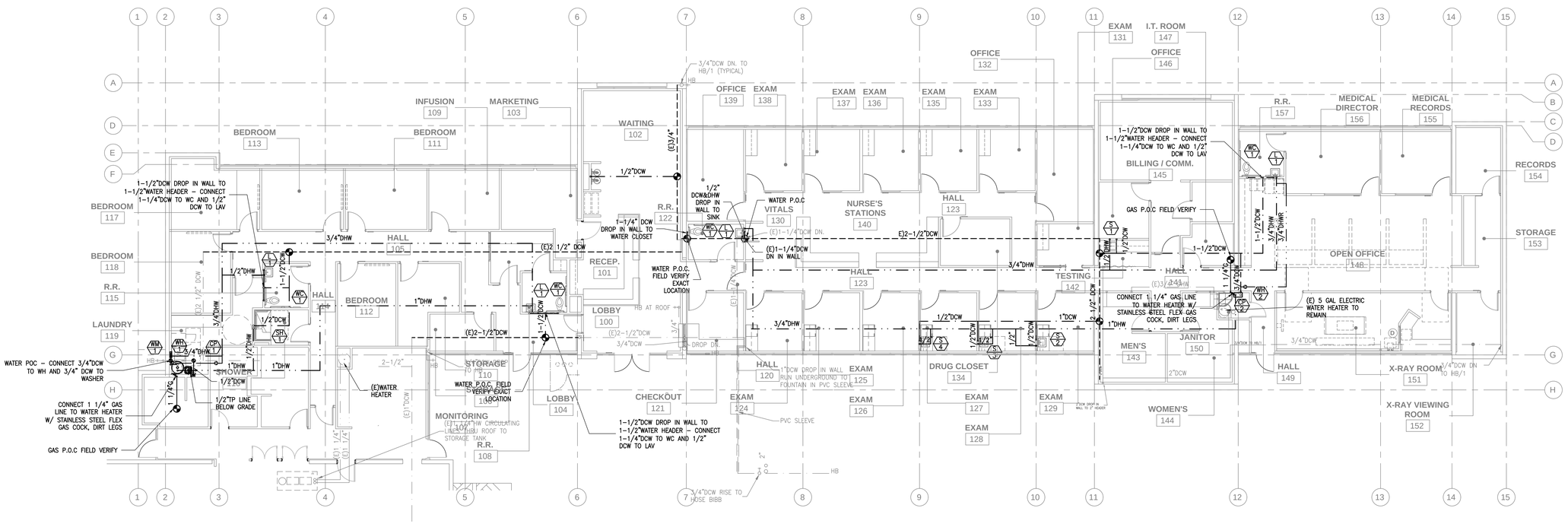

PLUMBING PLAN - DCW / DHW

SCALE: 1/8" = 1'-0"

Klassen corporation
Architecture Construction
2021 Westwind Drive
Bakersfield, CA 93301
(661) 324-3000
(661) 324-3900 Fax
www.klassencorp.com

REGISTERED PROFESSIONAL ENGINEER FRANK J. CANTELLA No. 21190 MECHANICAL STATE OF CALIFORNIA

The above drawings and specifications and ideas, designs and arrangements represented thereby are and shall remain the property of the architect and no part thereof shall be copied, disclosed to others or used in connection with any work or project other than the specific project for which they have been prepared and developed without the written consent of the architect. Visual contact with these drawings or specifications shall constitute conclusive evidence of acceptance of these restrictions.

Written dimensions on these drawings shall have precedence over scaled dimension. contractors shall verify and be responsible for all dimensions and conditions on the job and this office must be notified of any variations from the dimensions and conditions shown by these drawings. Shop details must be submitted to this office for approval before proceeding with fabrication.

TENANT IMPROVEMENTS
SAN JOAQUIN VALLEY PULMONARY
5801 TRUXTUN AVE, BAKERSFIELD CA 933309

DATE	ISSUED FOR	MARK
07/01/19	OWNER SD SUBMITTAL	
07/31/19	OWNER DD SUBMITTAL	
08/15/19	OWNER CD SUBMITTAL	

Project No. : C19-148

PLUMBING PLANS

P3.0

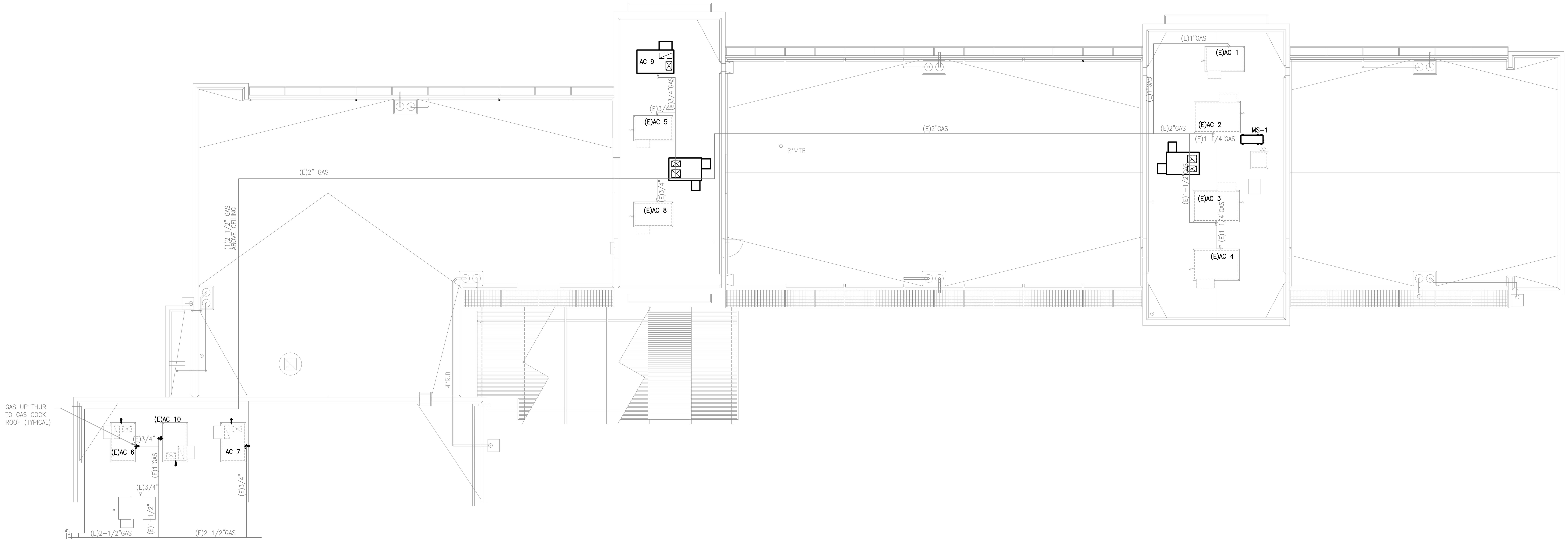

PLUMBING ROOF PLAN

SCALE: 1/8" = 1'-0"

WATER SERVICE CALCULATIONS PER CPC 2016

FIXTURE	NO.	FIX. UNIT.	TOTAL COLD	TOTAL HOT
WATER CLOSET FV (1.28GPF)	11.0	-	175.0	-
URINAL (0.5 GPF)	2.0	-	35.0	-
HOSE BIBB	0.0	2.5	0.0	-
HOSE BIBB (ADDITIONAL)	0.0	1.0	0.0	-
LAWN SPRINKLERS	0.0	1.0	0.0	-
WASHFOUNTAIN(CIRCULAR SPRAY)(20GPM)	0.0	4.0	0.0	0.0
TUB/SHOWER	0.0	4.0	0.0	0.0
SHOWER, PER HEAD (2.0GPM)	2.0	2.0	4.0	3.0
CLOTHES WASHER	1.0	4.0	4.0	3.0
SERVICE SINK OR MOP BASIN (2.2GPM)	1.0	3.0	3.0	2.3
CLINC FAUCET	0.0	3.0	0.0	0.0
WATER CLOSET GT (1.28GPF)	6.0	2.5	15.0	0.0
DENTAL UNIT, CUSPIDOR	0.0	1.0	0.0	0.0
DISHWASHER, DOMESTIC	0.0	1.5	0.0	0.0
WASHUP SINK, EACH SET OF FAUCETS	0.0	2.0	0.0	0.0
BAR SINK (1.5GPM)	0.0	2.0	0.0	0.0
KITCHEN SINK (1.8GPM)	3.0	1.5	4.5	3.4
LAUNDRY (2.2GPM)	0.0	1.5	0.0	0.0
LAVATORY (.20GPM PER CYCLE)	13.0	1.0	13.0	9.8
DRINKING FOUNTAIN OR WATERCOOLER	1.0	0.5	0.5	0.0
TOTAL FIXTURE UNITS			254.0	21.4

TOTAL GPM CPC CHARTS A 103.1(1) & 103.1(2)		98.2
MAIN LINE SIZE		3"
WATER METER SIZE		
TOTAL ENVELODED LENGTH (FROM METER TO MOST REMOTE FIXTURE IN FT.)		200.00'
PRESSURE LOSS IN PSI		
TOTAL RISE FOR HEAD LOSS	.43 X 10.00'	4.3
PSI REQUIRED FOR WATER CLOSET/URINAL (FV=15.0 FT=8.0 PSI)		15.0
PSI FLOW LOSS THROUGH WATER METER CPC CHART A 102.2		5.5
PSI FLOW LOSS THROUGH BACKFLOW PREVENTOR		12.0
TOTAL PRESSURE LOSS IN SYSTEM		36.8
MINIMUM PSI AVAILABLE @ JOB SITE (PLUMBER TO VERIFY)		60.0
REMAINING PSI AVAILABLE (IF NEGITIVE USE BOOSTER PUMP)		23.2
PSI DROP PER 100'-0" AVAILABLE		11.6

CALIFORNIA PLUMBING CODE SECTION 610.12
DOMSTIC COLD WATER MAX. (8) FOOT PER SECOND
DOMSTIC HOT WATER MAX. (5) FOOT PER SECOND

GAS SERVICE CALCULATIONS

LOW PRESSURE - CPC TABLE 1216.2(1)

AC/1	1.0	74,000
AC/2	1.0	125,000
AC/3	1.0	125,000
AC/4	1.0	125,000
AC/5	1.0	74,000
AC/6	1.0	74,000
AC/7	1.0	74,000
AC/8	1.0	74,000
AC/9	1.0	32,800
AC/10	1.0	74,000
WH.1	1.0	199,000
WH.2	1.0	199,000
WATER HEATER 1		120,000
WATER HEATER 2		180,000
EXISTING WATER HEATER		120,000
TOTAL BTU/HR INPUT		1,669,800
TOTAL CFH - BTUH/1000 (BTU/CF)		1,669.8
MAIN LINE SIZE - CPC TABLE 12-3		3"
8"WATER COLUMN (SG.60)		
TOTAL ENVELOPED LENGTH		150.00'

WASTE SERVICE CALCULATION

DRINKING FOUNTAIN OR WATERCOOLER	1.0	0.5	0.5
LAVATORY (.25GPM PER CYCLE)	3.0	1.0	3.0
(E)LAVATORY (.25GPM PER CYCLE)	10.0	1.0	10.0
KITCHEN SINK (1.8GPM)	1.0	1.5	1.5
(E)KITCHEN SINK (1.8GPM)	2.0	1.5	3.0
SERVICE SINK OR MOP BASIN	1.0	3.0	3.0
(E)URINAL (0.5 GPF)	2.0	2.0	4.0
(E)SHOWER	1.0	2.0	2.0
SHOWER	1.0	2.0	2.0
(E)WATER CLOSET FV (1.28GPF)	8.0	4.0	32.0
WATER CLOSET FV (1.28GPF)	3.0	4.0	12.0
WATER CLOSET GT (1.28GPF)	6.0	3.0	18.0
FLOOR DRAIN (EMERGENCY)	2.0	0.0	0.0
FLOOR DRAIN	1.0	2.0	2.0
CLOTHES WASHER	1.0	4.0	4.0
			0.0
			0.0
TOTAL FIXTURE UNITS			97.0
MAIN LINE SIZE PER CPC TABLE			4"
BASED ON SLOPE OF 1/4" PER FOOT			
FV - FLUSH VALVE			

PLUMBING FIXTURE SCHEDULE

MARK	FIXTURE	DCW	DHW	S&W	TRAP	VENT	DESCRIPTION
WC 1	ACCESSIBLE TOILET	1 1/4"	–	4"	INT.	2"	ZURN #Z5665-BWL ECOVANTAGE TOILET – FLOOR MOUNTED – ELONGATED BOWL – ADA 16.75"HT – 1.28 GPF – SIPHON JET ACTION – SLOAN #8111-1.28 BATTERY POWERED SENSOR OPARATED FLUSH VALVE – OLSONITE #95 OPEN FRONT SEAT LESS COVER (2) BOLT CAPS
L 1	LAVATORY	1/2"	–	2"	1-1/4"	2"	AMERICAN STANDARD LUCERNE #0355.012 – WALL MTD – VITREOUS CHINA – CHICAGO FAUCET #3300-ABCP – .5 GPM, MIN. – LA PATTER P-TRAP W/ ACCESSIBLE INSULATION WRAP BY PLUMBEREX "HANDY SHIELD MAXX" #2003 – MEETS AST E84-07 TESTING STANDARD – CHICAGO SUPPLY & STOPS # 1017-ABCP – JR SMITH WALL CARRIER #0723 – VERIFY HOLE DRILLING FOR FAUCET – LAVATORY SHALL BE ADA COMPLIANT & MEET CALGREEN MAX. .4 GPM FLOW RATE (OR EQUAL)
CP 1	CIRCULATOR PUMP	–	–	–	–	–	BELL & GOSSETT #NBF-8S/LW CIRCULATOR PUMP – 8.5 GPM @ 8 FT HD – BRONZE CONSTRUCTION – 39 WATTS – 115v – 9 LBS – CONTROL WITH AQUASTAT
FS 1	FLOOR SINK	–	–	2"	2"	2"	PROFLO #PF906K – CAST IRON – DOME BOTTOM STRAINER – NO HUB OUTLET – 2" 'P' TRAP
TP 1	TRAP PRIMER	1/2"	–	–	–	–	PRECISION PLUMBING PRODUCTS #P2-500 TRAP PRIMER MOUNTED IN WALL BOX WITH HINGED COVER PRIMER LINE BELOW FLOOR TO FLOOR DRAIN (MAX. 4 FLOOR DRAINS PER TRAP PRIMER)
WH 1	TANK WATER HEATER	1-1/2"	1-1/2"	–	–	–	A.O SMITH #BTH-120 MXI GAS WATER HEATER – 60 GAL – 120,000 BTU/HR – 172 GPH AT 80°F RISE, (VERIFY SITE VOLTAGE PRIOR TO ORDERING) PRESSURE RELIEF VALVE, WEIGHT 460 LBS.
S 1,2,3,4	SINK	3/4"	3/4"	2"	1-1/2"	2"	JUST #SLN-ADA-1921-A-GR – 19"x21"x4" – SINGLE COMPARTMENT TYPE 304 STAINLESS STEEL SELF-RIMMING SINK – JUST #J-35 DRAIN – CHICAGO #350-317CP FAUCET
WM 1	WASHER BOX	3/4"	3/4"	2"	2"	2"	GUY GRAY WASHING MACHINE HOOKUP w/ 1/4 TURN ANGLE STOP, WATER HAMMER ARRESTOR, DRAIN INLET w/P-TRAP PLUMBED INTO WALL, VALVE BOX & FLANGE
WH 2	TANKLESS WATER HEATER	1"	1"	–	–	–	RINNAI #REU-KBD2934FFUD-US CONDENSING INDOOR TANKLESS WATER HEATER – TEMPERATURE CONTROLLED FORCED COMBUSTION – MIN. 15,200 BTUH & MAX. 180,000 BTUH NATURAL GAS RATE INPUT – .4 TO 9.0 GPM FLOW RATE @ 50°F RISE – WATER TEMP. TO BE SET @ MAX. 120° PLUMBING INSTALLATION KIT – 70 LBS
DF 1	ACCESSIBLE DRINKING FOUNTAIN	1/2"	–	2"	1-1/4"	2"	ELKAY #EZSTL8C BARRIER FREE WALL MOUNTED "HI-LO" ELECTRIC DRINKING FOUNTAIN – WALL MOUNTED – DUAL HEIGHT FOUNTAINS – WALL MOUNT SUPPORT CARRIER – PUSH BUTTON OPERATED VANDAL RESISTANT BUBBLER HEADS WITH INTEGRAL LAMINAR ANTI-SQUIRT FLOW – VANDAL RESISTANT FOR WASTE STRAINERS AND BOTTOM PLATES – 18GA. TYPE 304

Klassen corporation
Architecture Construction
2021 Westwind Drive
Bakersfield, CA 93301
(661) 324-3000
(661) 324-3900 Fax
www.klassencorp.com

REGISTERED PROFESSIONAL ENGINEER
FRANK J. CANTELMI
No. 21190
MECHANICAL
STATE OF CALIFORNIA

The above drawings and specifications and ideas, designs and arrangements represented thereby are and shall remain the property of the architect: and no part thereof shall be copied, disclosed to others or used in connection with any work or project other than the specific project for which they have been prepared and developed without the written consent of the architect. Visual contact with these drawings or specifications shall constitute conclusive evidence of acceptance of these restrictions.

Written dimensions on these drawings shall have precedence over scaled dimension: contractors shall verify and be responsible for, all dimensions and conditions on the job and this office must be notified of any variations from the dimensions and conditions shown by these drawings. Shop details must be submitted to this office for approval before proceeding with fabrication.

TENANT IMPROVEMENTS
SAN JOAQUIN VALLEY PULMONARY
5801 TRUXTUN AVE, BAKERSFIELD CA 933309

MARK	ISSUED FOR	DATE
△	OWNER SD SUBMITTAL	07/01/19
△	OWNER DD SUBMITTAL	07/31/19
△	OWNER CD SUBMITTAL	08/15/19
△		
△		
△		
△		

Project No. : C19-148

PLUMBING
ROOF PLAN,
SCHEDULES

P4.0

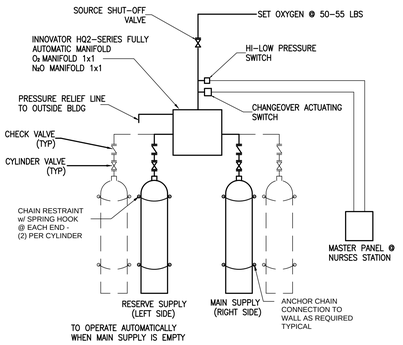

(TYPICAL FOR NITROGEN, NITROUS OXIDE & OXYGEN. SEE SCHEDULE & FLOOR PLAN FOR NUMBER OF CYLINDERS PER MED GAS)

2 O_2 AND N_2O PIPING

N.T.S.

Example:
4 Gases, English CSA, Local pressure sensors, Oxygen, MedVac, Medical Air and Nitrous Oxide

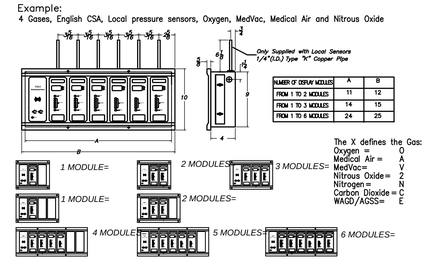

NUMBER OF DISPLAY MODULES	A	B
FROM 1 TO 2 MODULES	11	12
FROM 1 TO 3 MODULES	14	15
FROM 1 TO 6 MODULES	24	25

The X defines the Gas:

Oxygen =	O
Medical Air =	A
MedVac=	V
Nitrous Oxide=	Z
Nitrogen =	N
Carbon Dioxide =	C
WACD/AGSS=	E

1.) The alarm shall be microprocessor based with individual microprocessors on each display and sensor board. The sensors shall be capable of local (in box) or remote mounting. Each sensor and display unit shall be gas specific, with an error message display for an incorrect connection.
2.) The area alarms shall be of modular construction and shall be field expandable with the addition of extra modules. Up to six services can be accommodated per standard box.
3.) Each specific service shall be provided with an LED digital readout comprising of 0-250psi [0-1,724kPa] for pressure and 0-30"Hg [-100-0kPa] for Vacuum. The digital read-out shall provide a constant indication of each service being measured. A bar graph trend indicator shall be provided for each service indicating a green "NORMAL", yellow "CAUTION" and a red "HIGH" or "LOW" alarm condition. Under normal operation the bar graph display shall move up and down in the "GREEN" range depending on service usage. If an alarm occurs, the "RED" alarm light shall flash and the audible alarm will sound. Pushing the "ALARM MUTE" button will cancel the audible alarm, but the unit will remain in the alarm condition until the problem is rectified.
4.) The default set-points shall be +/-20% variation from normal condition. In the calibration mode the following parameters shall be field adjustable: High/Low set-points, Imperial/Metric units, Repeat alarm Enable/Disable. Set-points shall be adjustable by two on board push buttons.
5.) In addition, "TEST" & "ALARM MUTE" buttons shall be easily accessible to operate and test the unit.
6.) The box shall be fabricated from 18 gauge steel with 1/4" I.D. type "K" copper pipe for connection to the service line. The box mounting brackets shall be adjustable to accommodate for different wall thickness.
7.) Input power to the alarm is: 100 VAC to 240 VAC, 50 to 60 HZ.
8.) The Alarm is UL Listed to U.S. and Canadian safety standards. products comply with NFPA-99.

1 MULTIPLE ZONE VALVE BOX

N.T.S.

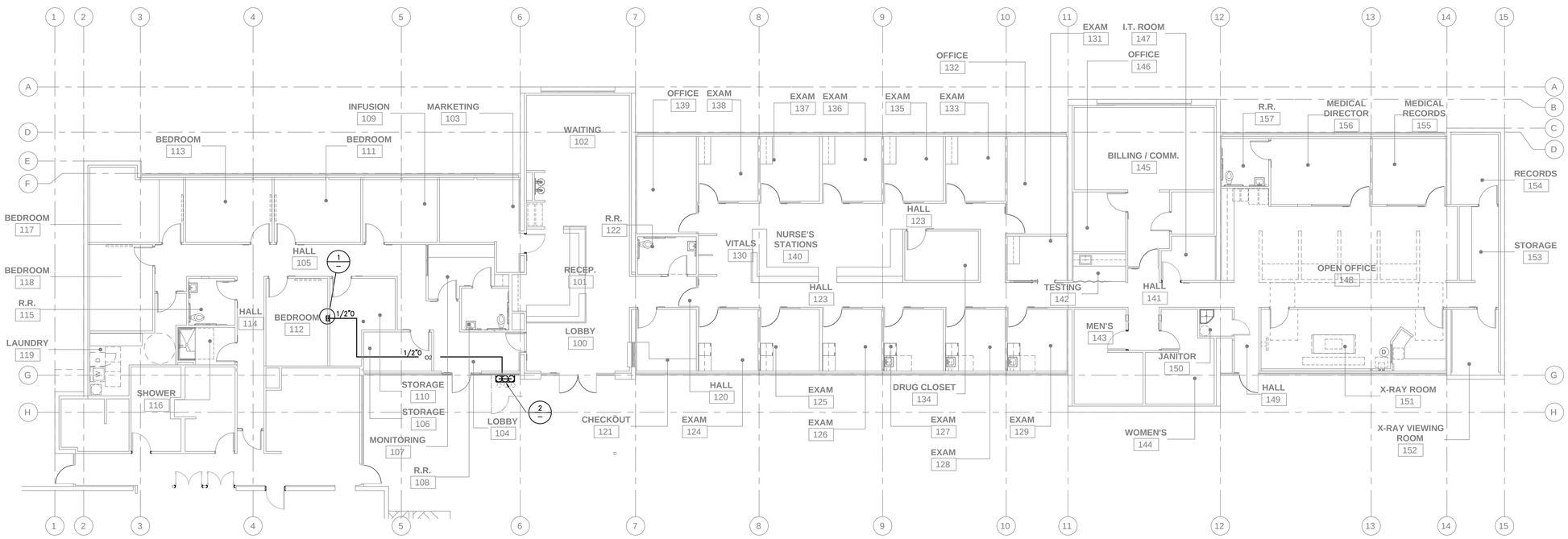

PLUMBING PLAN - MEDICAL GAS(OXYGEN)

SCALE: 1/8" = 1'-0"

Klassen corporation
Architecture Construction
2021 Westwind Drive
Bakersfield, CA 93301
(661) 324-3000
(661) 324-3900 Fax
www.klassencorp.com

REGISTERED PROFESSIONAL ENGINEER FRANK J. CANTELLA No. 21190 MECHANICAL STATE OF CALIFORNIA

The above drawings and specifications and ideas, designs and arrangements represented thereby are and shall remain the property of the architect and no part thereof shall be copied, disclosed to others or used in connection with any work or project other than the specific project for which they have been prepared and developed without the written consent of the architect. Visual contact with these drawings or specifications shall constitute conclusive evidence of acceptance of these restrictions.

Written dimensions on these drawings shall have precedence over scaled dimension. contractors shall verify and shall be responsible for all dimensions and conditions on the job and this office must be notified of any variations from the dimensions and conditions shown by these drawings. Shop details must be submitted to this office for approval before proceeding with fabrication.

TENANT IMPROVEMENTS
SAN JOAQUIN VALLEY PULMONARY
5801 TRUXTUN AVE, BAKERSFIELD CA 933309

DATE	ISSUED FOR	MARK
07/01/19	OWNER SD SUBMITTAL	
07/31/19	OWNER DD SUBMITTAL	
08/15/19	OWNER CD SUBMITTAL	

Project No. : C19-148

PLUMBING PLAN - MEDICAL GAS (OXYGEN)

P5.0

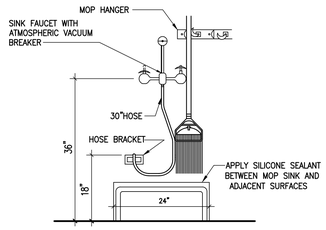

17 N.T.S.

13 MOP SINK N.T.S.

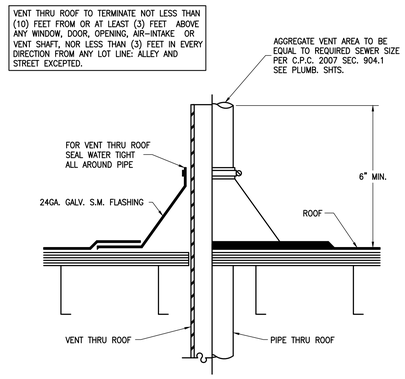

9 VENT/PIPE THRU ROOF N.T.S.

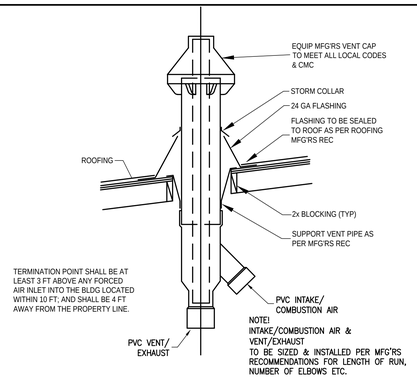

5 WH CONCENTRIC VTR N.T.S.

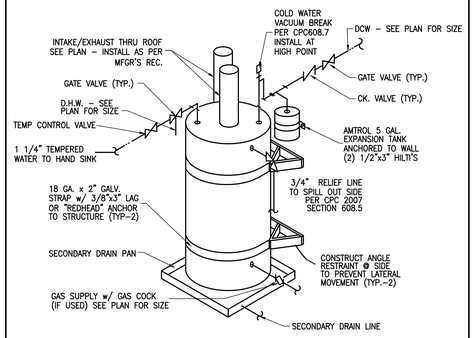

1 WATER HEATER PIPING & MOUNTING N.T.S.

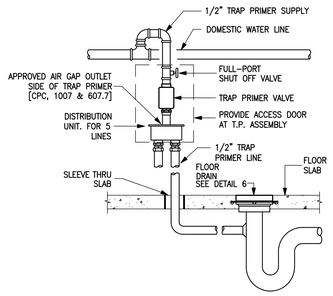

18 N.T.S.

14 TRAP PRIMER N.T.S.

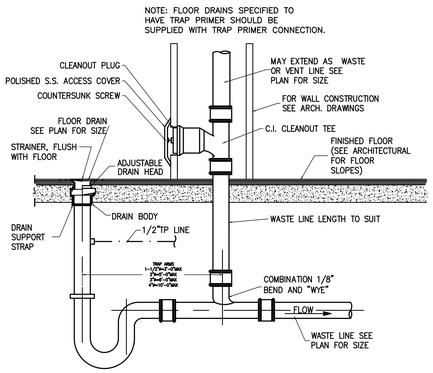

10 FLOOR DRAIN N.T.S.

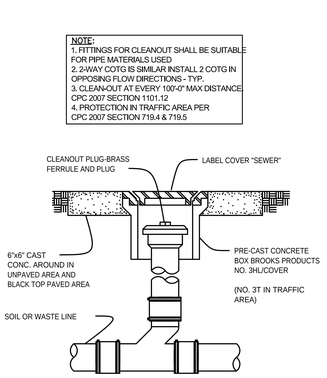

6 CLEAN OUT TO GRADE N.T.S.

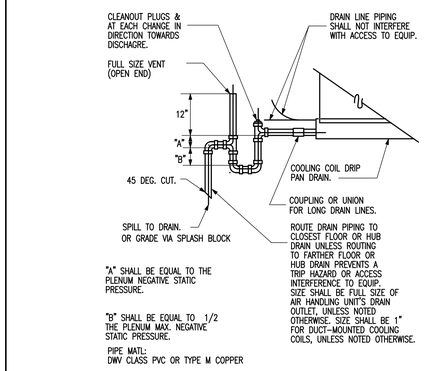

2 CONDENSATE DRAIN PAN

19 N.T.S.

15 REDUCED BACKFLOW PREVENTER IN ATTIC

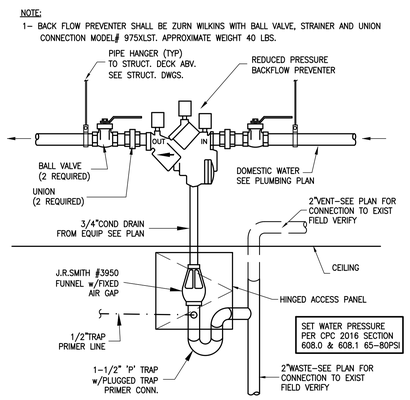

16

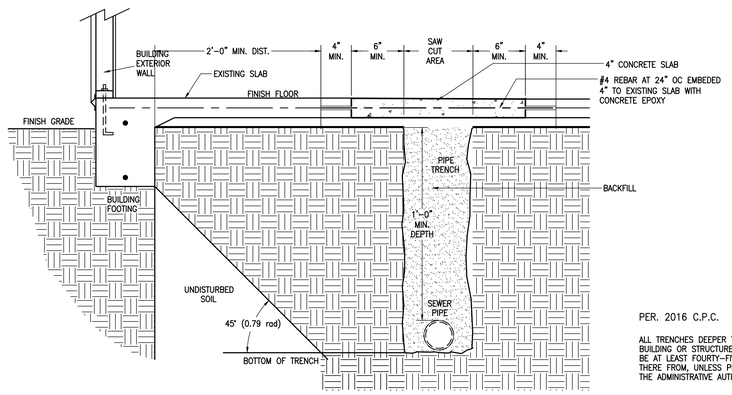

PER. 2016 C.P.C.

ALL TRENCHES DEEPER THAN THE FOOTING OF ANY BUILDING OR STRUCTURE AND PARALLELING THE SAME SHALL BE AT LEAST FOURTY-FIVE (45) DEGREES (079.rad) THERE FROM, UNLESS PERMISSION IS OTHERWISE GRANTED BY THE ADMINISTRATIVE AUTHORITY.

11 TRENCH DETAIL N.T.S.

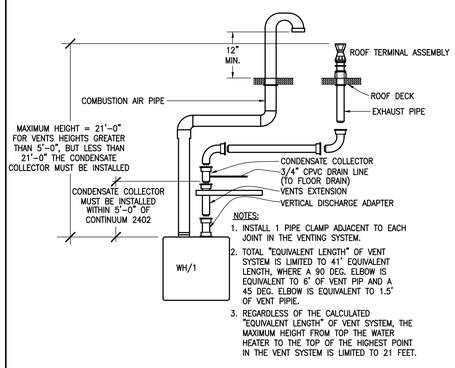

3 TANKLESS WATER HEATER FLUE

20

16

12

8

4

Klassen corporation
Architecture Construction
2021 Westwind Drive
Bakersfield, CA 93301
(661) 324-3000
(661) 324-3900 Fax
www.klassencorp.com

REGISTERED PROFESSIONAL ENGINEER FRANK J. CANTELLA No. 21190 ARCHITECT STATE OF CALIFORNIA

The above drawings and specifications and ideas, designs and arrangements represented thereby are and shall remain the property of the architect and no part thereof shall be copied, disclosed to others or used in connection with any work or project other than the specific project for which they have been prepared and developed without the written consent of the architect. Visual contact with these drawings or specifications shall constitute conclusive evidence of acceptance of these restrictions.

Written dimensions on these drawings shall have precedence over scaled dimension. contractors shall verify and shall be responsible for all dimensions and conditions on the job and this office must be notified of any variations from the dimensions and conditions shown by these drawings. Shop details must be submitted to this office for approval before proceeding with fabrication.

TENANT IMPROVEMENTS
SAN JOAQUIN VALLEY PULMONARY
5801 TRUXTUN AVE, BAKERSFIELD CA 933309

MARK	ISSUED FOR	DATE
	OWNER SD SUBMITTAL	07/01/19
	OWNER DD SUBMITTAL	07/31/19
	OWNER CD SUBMITTAL	08/15/19

Project No. : C19-148

PLUMBING DETAILS

P6.0

MECHANICAL ABBREVIATIONS

&	AND
∠	ANGLE
@	AT
℄	CENTER LINE
PL	PROPERTY LINE
ø	DIAMETER or ROUND
(E)	EXISTING
(N)	NEW
⊥	PERPENDICULAR
#	POUND or NUMBER
(T)	THERMOSTAT
A/C	AIR CONDITIONING
AP	ACCESS PANEL
ABV	ABOVE
ADJ	ADJUSTABLE
AFF	ABOVE FINISH FLOOR
AE	ADJUSTABLE EXTRACTOR
AGGR	AGGREGATE
ALUM	ALUMINUM
APPROX	APPROXIMATE
APPT	APPOINTMENTS
ARCH.	ARCHITECTURAL
ARI	AMERICAN REFRIGERATION INSTITUTE
ASPH	ASPHALT
ASST	ASSISTANT
AUTO.	AUTOMATIC
BD	BALANCING DAMPER
BDD	BACKDDRAFT SAMPER
(BF)	BELOW FINISH FLOOR
(BG)	BELOW FINISH GRADE
BLDG	BUILDING
BLKG	BLOCKING
BM	BEAM
BTUH	BRITISH THERMAL UNIT/ HOUR
BOT	BOTTOM
BV	BALL VALVE
CA	COMBUSTION AIR
CAP	CAPACITY
CD	CONDENSATE DRAIN
CFD	CEILING FIRE DAMPER
CFM	CUBIC FEET PER MINUTE
CHW	CHILLED WATER
CHWR	CHILLED WATER RETURN
CHWS	CHILLED WATER SUPPLY
CJ	CONTROL JOINT
CLG	CEILING
CLKG	CAULKING
CLR	CLEAR
CO	CLEANOUT
COL	COLUMN
COMP	COMPRESSED
CONC	CONCRETE
CONF	CONFERENCE
CONN	CONNECTION
CONST	CONSTRUCTION
CONT	CONTINUOUS
CORR	CORRIDOR
CTR	CENTER
CV	CHECK VALVE
DBL	DOUBLE
DB	DRY BULD (TEMPERATURE)
DEPT	DEPARTMENT
DET	DETAIL
DF	DRINKING FOUNTAIN
DHW	DOMESTIC HOT WATER
DHWR	DOMESTIC HOT WATER RETURN
DIA or ø	DIAMETER
DIR	DIRECTOR
DN	DOWN
DR	DOOR
DS	DOWNSPOUT
DSP	DRY STANDPIPE
DTR	DUCT THRU ROOF
DTW	DUCT THRU WALL
DWG	DRAWING
E	EAST
EA	EXHAUST AIR
EAG	EXHAUST AIR GRILLE
EDB	ENTERING DRY BUBL
EER	ENERGY EFFICIENCY RATIO
ELEC	ELECTRICAL
ELEV	ELEVATION
EMER	EMERGENCY
ENCL	ENCLOSURE
EP	ELECTRICAL PANEL
EQ	EQUAL
EQUIP	EQUIPMENT
(E)	EXISTING
ESP	EXTERNAL STATIC PRESSURE
EWB	ENTERING WET BULB
EXPO.	EXPOSED
EXT	EXTERIOR
FA	FIRE ALARM
FC	FLEXIBLE CONNECTION
FD	FIRE DAMPER
FDN	FOUNDATION
FHC	FIRE HOSE CAB.
FIN.	FINISH
FLA	FULL LOAD AMPS
FM	FIRE MAIN
FPM	FEET PER MINUTE
FSD	FIRE/SMOKE DAMPER
FSL	FIRE SPRINKLER LINE
FTR	FLUE THRU ROOF
FURR	FURRING
GA	GAUGE OR GAGE
GALV	GALVANIZED
GEN	GENERAL
GI	GALVANIZED IRON
GPM	GALLONS PER MINUTE
G	GAS LINE

HB	HOSE BIBB
HC	HANDICAPPED
HD	HEAD
HDWE	HARDWARE
HI.	HIGH
HORIZ	HORIZONTAL
HP	HORSEPOWER
HW	HOT WATER
HWR	HOT WATER RETURN
HWS	HOT WATER SUPPLY
HVAC	HEATING, VENTILATING, AIR CONDITIONING
ID	INSIDE DIAMETER (DIM.)
INSUL	INSULATION
INT	INTERIOR
LAV	LAVATORY
LBS	POUNDS
LPG	LIQUID PETROLEUM GAS
MACH	MACHINE
MATL	MATERIAL
MAX.	MAXIMUM
MBH	BTU PER HOUR (THOUSANDS)
MCA	MINIMUM CIRCUT AMPS
MECH	MECHANICAL
MTL	METAL
MFGR	MANUFACTURER
MH	MANHOLE
MIN	MINIMUM
MISC	MISCELLANEOUS
MUA	MAKE UP AIR
(N)	NEW
NIC	NOT IN CONTRACT
NO. or #	NUMBER
NOM	NOMINAL
NTS	NOT TO SCALE
OA	OVERALL
OBD	OPPOSED BLADE DAMPER
OC	ON CENTER
OSA	OUTSIDE AIR
OVHD	OVERHEAD
PTN	PARTITION
PHYS	PHYSICAL
PR	PRESSURE RELIEF
PVC	POLY-VINYL CLORIDE PIPE
PLAS	PLASTER
PLYWD	PLYWOOD
POC	POINT OF CONNECTION
PREFAB	PREFABRICATED
PREP	PREPARATION
PSI	POUNDS PER SQUARE INCH
PW	PROCESSED WATER
R	RISER
RA	RETURN AIR
RAD.	RADIUS
RAG	RETURN AIR GRILLE
REF	REFERENCE
REINF	REINFORCED
REQD	REQUIRED
RM	ROOM
RND	ROUND
S	SOUTH
SA	SUPPLY AIR
SAD	SUPPLY AIR DIFFUSER
SAG	SUPPLY AIR GRILLE
SAR	SUPPLY AIR REGISTER
SCHD	SCHEDULE
SD	SMOKE DETECTOR
SEER	SEASONAL ENERGY EFFICIENCY
SECT.	SECTION
SHT	SHEET
SIM	SIMILAR
SQ	SQUARE
SPEC	SPECIFICATION
SP	STATIC PRESSURE
SOV	SHUT-OFF VALVE
SS	SERVICE SINK
SST	STAINLESS STEEL
STD	STANDARD
STL	STEEL
STOR	STORAGE
STRUCT	STRUCTURAL
SUPV	SUPERVISOR
SUSP	SUSPENDED
S&W	SOIL & WASTE
TC	TOP OF CURB
TEL	TELEPHONE
TER	TERRAZZO
TG	TRANSFER GRILLE
THK	THICK
TOC	TOP OF CONCRETE
TP	TRAP PRIMER
TRANS	TRANSCRIPTION
TREAT.	TREATMENT
TYP	TYPICAL
TV	TEMPERING VALVE
UL	UNDERWRITERS LABORATORIES
UON	UNLESS OTHERWISE NOTED
UR	URINAL
V	VENT
VD	VOLUME DAMPER
VTR	VENT THRU ROOF
VSAD	VARIBLE SUPPLY AIR DIFFUSER
W	WASTE LINE
W/	WITH
WFD	WALL FIRE DAMPER
WH	WATER HEATER
WHA	WATER HAMMER ARRESTOR
W/O	WITHOUT
WMF	WASHING MACHINE FITTING
WP	WATERPROOF
WT	WEIGHT

SYMBOLS

SYMBOL	DESCRIPTION
SIZE CFM	SUPPLY AIR CEILING DIFFUSER
SIZE CFM	SUPPLY VARIBLE AIR CEILING DIFFUSER HEAT & COOL
SIZE CFM	RETURN AIR CEILING REGISTER
SIZE CFM	EXHAUST AIR CEILING REGISTER
SIZE CFM	SUPPLY AIR WALL DIFFUSER
SIZE CFM	RETURN AIR WALL REGISTER
SIZE CFM	EXHAUST AIR WALL REGISTER
SIZE	TRANSFER GRILLE
	DUCTWORK (RECTANGULAR)
	DUCTWORK (ROUND)
	LINED DUCTWORK
	TURNIG VANE
	FLEXIBLE CONNECTION
	MANUAL AIR VOLUME DAMPER
FD FD	FIRE DAMPER
SFD SFD	SMOKE FIRE DAMPER
OAI 500	OUTSIDE AIR INTAKE MIN. CFM
(T) AC.1	ROOM THERMOSTAT-SUBSCRIPT INDICATES UNIT CONTROL
BT	BYPASS TIMER
TC	TIME CLOCK
RAS	RETURN AIR SENSOR
SD	DUCT SMOKE DETECTOR
	POINT OF CONNECTION
	CEILING EXHAUST FAN
CO	CO2 SENSOR

GENERAL MECHANICAL NOTES

SECTION 1
BASIC MECHANICAL MATERIALS AND METHODS

PART 1 – GENERAL

1.1 SUMMARY
A. LABOR, MATERIALS, TOOLS, AND SERVICES FOR A COMPLETE INSTALLATION OF EQUIPMENT AND SYSTEM CONTAINED IN THE CONTRACT DOCUMENTS.
B. PRINCIPAL FEATURES OF THE WORK INCLUDED ARE:
1. HEATING, VENTILATING, AIR CONDITIONING SYSTEMS, CONTROLS, AND MECHANICAL SYSTEM INSULATION.
2. ROOF CURBS FOR HVAC SYSTEMS, INTAKE HOODS, LOUVERS, SUPPLY FANS, AND RELIEF VENTS FURNISHED AND SET UNDER THIS DIVISION.
3. REFRIGERANT PIPING, CONNECTIONS, REFRIGERANT AND REFRIGERANT CHARGES.
4. EXCAVATING AND BACKFILLING FOR MECHANICAL WORK; COORDINATE WITH APPROPRIATE TRADE.
5. ANCHOR BOLTS, SLEEVES. SUPPORTS AND SIMILAR ITEMS TO BE BUILT INTO CONCRETE OR MASONRY.
6. PREPARATION FOR TESTING AND BALANCE OF MECHANICAL SYSTEMS AND CORRECTING DEFICIENCIES.
7. PREPARATION AND SUBMITTAL OF SHOP DRAWING AND PRODUCT DATA.
8. MAINTAINING A RECORD SET OF BLUE LINE PRINTS AND MAKING THEM TO INDICATE LOCATIONS OF CONCEALED ITEMS, AND DEVIATIONS MADE TO SUIT CONDITIONS AND PRODUCTION OF MECHANICAL AS-BUILT (RECORD) DRAWINGS.

1.2 JOB CONDITIONS.
A. SUBMITTAL OF BID IMPLIES BIDDER HAS READ APPLICABLE PARAGRAPHS OF THE SPECIFICATIONS AND WILL BE BOUND BY THEIR CONDITIONS.

1.3 LOCAL CONDITIONS
A. CONFORM WITH LOCAL CONDITIONS. COORDINATE WITH LOCAL UTILITIES ON SIZE OF UTILITY SERVICE.

1.4 INTENT
A. THE CONTRACT DOCUMENTS (DRAWINGS AND SPECIFICATIONS) DESCRIBE THE MECHANICAL WORK OF THIS PROJECT ANY ITEMS MENTIONED IN ONE PART SHALL BE AS BINDING AS THOUGH MENTIONED IN BOTH.
B. THE CONTRACT DOCUMENTS FORM A GUIDE FOR A COMPLETE MECHANICAL INSTALLATION. WHERE AN ITEM IS REASONABLY NECESSARY BUT NOT SPECIFICALLY MENTIONED, SUCH AS DUCT HANGERS OR TRANSITIONS, PIPING OFFSETS, DRAINS, ETC., FOR A COMPLETE SYSTEM, PROVIDE SAME.
C. MECHANICAL LAYOUTS INDICATED ON DRAWINGS ARE DIAGRAMMATIC ONLY. EXACT LOCATIONS OF DUCTS, AND EQUIPMENT SHALL BE GOVERNED BY THE DRAWINGS OF RELATED TRADES.

1.5 DEVIATIONS
A. NO DEVIATIONS FROM SPECIFICATIONS AND DRAWINGS SHALL BE MADE WITHOUT FULL KNOWLEDGE AND WRITTEN CONSENT OF CONSTRUCTION MANAGER.
B. SHOULD CONTRACTOR FIND, DURING PROGRESS OF WORK, CONDITIONS WHICH DICTATE A MODIFICATION OF ANY PARTICULAR REQUIREMENTS, REPORT SUCH ITEM PROMPTLY FOR DECISION OF INSTRUCTIONS.

1.6 QUALITY ASSURANCE
A. COMPLY WITH APPLICABLE LOCAL, STATE AND FEDERAL CODES.
B. COMPLY WITH APPLICABLE REQUIREMENTS OF RECOGNIZED INDUSTRY ASSOCIATIONS WITH PROMULGATE STANDARDS FOR THE VARIOUS TRADES. (SEE INDIVIDUAL SECTIONS OF DIVISION 15)
C. EMPLOY ONLY QUALIFIED JOURNEYMEN FOR THIS WORK. EMPLOY COMPETENT, QUALIFIED MECHANICS TO SUPERVISE THE WORK.

1.7 CODES AND STANDARDS
A. PERFORM WORK SPECIFIED IN DIVISION 15 IN ACCORDANCE WITH THE APPLICABLE CODES AND STANDARDS LISTED BELOW, AND SUCH STANDARDS THAT MAY BE SPECIFIED IN OTHER SECTIONS. WHEN THESE SPECIFICATIONS ARE MORE STRINGENT, THEY TAKE PRECEDENCE. IN CASE OF CONFLICT, OBTAIN A DECISION FROM THE MECHANICAL ENGINEER.

1. NFPA 54: NATIONAL FUEL AND GAS CODE.
2. NFPA 90A: AIR CONDITIONING AND VENTILATION SYSTEMS.
3. NFPA 101: LIFE SAFETY CODE.
4. APPLICABLE STATE BUILDING CODE.
5. APPLICABLE STATE MECHANICAL CODE.
6. HANDICAPPED CODE ANSI A117.1 AND ADA
7. APPLICABLE STATE ENERGY CODE.
8. AGA: AMERICAN GAS ASSOCIATION.
9. ANSI: AMERICAN NATIONAL STANDARDS INSTITUTE.
10. ARI: AMERICAN REFRIGERATION INSTITUTE.
11. ASHRAE: AMERICAN SOCIETY OF HEATING, REFRIGERATION AND AIR CONDITIONING ENGINEERS.
12. ASME: AMERICAN SOCIETY FOR MECHANICAL ENGINEERS.
13. ASTM: AMERICAN SOCIETY FOR TESTING AND MATERIALS.
14. MSS: MANUFACTURER'S STANDARDIZATION SOCIETY OF THE VALVE AND FITTING INDUSTRY.
15. NFPA: NATIONAL FIRE PROTECTION ASSOCIATION.
16. SMACNA: SHEET METAL AND AIR CONDITIONING CONTRACTOR'S NATIONAL ASSOCIATION.
17. UL: UNDERWRITERS' LABORATORIES. INC.

1.8 COORDINATION
A. CAREFULLY EXAMINE SPECIFICATIONS AND DRAWINGS TO BE THOROUGHLY FAMILIAR WITH ITEMS WHICH REQUIRE HVAC CONNECTIONS AND COORDINATION.
B. COORDINATE WITH OTHER DIVISIONS TO LEAVE PROPER CHASES AND OPENINGS. PLACE OUTLETS, ANCHORS, SLEEVES, AND SUPPORTS PRIOR TO POURING CONCRETE OF INSTALLATION OF MASONRY WORK.

1.9 SUBMITTALS
A. SUBMITTALS ARE ONLY REQUIRED FOR SPECIFIC ITEMS OF EQUIPMENT OR MATERIAL LISTED IN INDIVIDUAL SECTIONS OF THESE SPECIFICATIONS.
B. WITHIN 15 DAYS AFTER AWARD OF CONTRACT FOR THIS WORK, SUBMIT A LIST OF PROPOSED MANUFACTURERS (OF EQUIPMENT OR MATERIAL TO BE USED) FOR APPROVAL. SUBMIT THIS LIST BEFORE SUBMITTAL OF SHOP DRAWINGS AND PRODUCT DATA, AND OBTAIN APPROVAL BEFORE SUBMITTING REQUIRED ITEMS.
C. SHOP DRAWINGS (NOT REQUIRED FOR OWNER FURNISHED EQUIPMENT).

1.10 DELIVERY AND STORAGE
A. INSOFAR AS POSSIBLE, DELIVER ITEMS IN MANUFACTURER'S ORIGINAL UNOPENED PACKAGING. WHERE THAT IS NOT PRACTICAL. COVER ITEMS WITH PROTECTIVE MATERIALS TO KEEP THEM FROM BEING DAMAGED. USE CARE IN LOADING, TRANSPORT, UNLOADING, AND STORAGE TO KEEP ITEMS FROM BEING DAMAGED.

1.11 FIRE RATINGS
A. MATERIALS USED ANYWHERE IN THE WORK MUST HAVE NFPA RATINGS AS FOLLOWING:
1. FLAME SPREAD – NOT OVER 25
2. SMOKE DEVELOPED – NOT OVER 50
3. FUEL CONTRIBUTED – NOT OVER 25
B. MATERIALS SHALL BE "SELF EXTINGUISHING".

1.12 PERMITS AND FEES
A. OBTAIN, PAY FOR, AND DELIVER PERMITS, CERTIFICATION OF INSPECTION, AND OTHER SUCH ITEMS REQUIRED BY THE AUTHORITIES HAVING JURISDICTION. DELIVER CERTIFICATION TO THE CONSTRUCTION MANAGER PRIOR TO FINAL ACCEPTANCE OF THE WORK. AN INSPECTION CERTIFICATE FOR EACH CLASS OF WORK REQUIRING INSPECTION MUST BE SUBMITTED PRIOR TO OR WITH THE FINAL PAYMENT INVOICE. THE RESPONSIBLE TRADE CONTRACTOR MUST MAKE APPLICATION FOR THE INSPECTION, COORDINATE SAME AND PAY THE REQUIRED INSPECTION FEE.

1.13 EXTENDED WARRANTIES
A. WORK FURNISHED UNDER THE CONTRACT SHALL BE WARRANTED AGAINST DEFECTS IN WORKMANSHIP AND (CONTRACTOR FURNISHED) MATERIALS FOR A PERIOD OF NOT LESS THAT ONE (1) YEAR, OR AS OTHERWISE SPECIFIED, FROM THE DATE OF FINAL ACCEPTANCE OF THE INSTALLATION, DEFECTS OF WORKMANSHIP DEVELOPING DURING THIS PERIOD SHALL BE REMEDIED, AND DEFECTIVE MATERIAL REPLACED, WITHOUT ADDITIONAL COST. WHEN DEFECTS IN A TRADE CONTRACTOR'S WORK CAUSES DAMAGE TO THE WORK OF THE OTHER TRADE CONTRACTORS, SUCH DAMAGE SHALL BE REPAIRED BY THE TRADE CONTRACTOR CAUSING DAMAGE AND WORK RESTORED TO ITS ORIGINAL CONDITION, AT THE EXPENSE OF THE TRADE CONTRACTOR THAT CAUSED THE DAMAGE.

PART 2 – PRODUCTS

2.1 MATERIALS AND EQUIPMENT
A. WITHIN THE CONTRACT DOCUMENTS RELATING TO MECHANICAL WORK, MANUFACTURER'S NAMES, CATALOG NUMBERS, AND OTHER PROPRIETARY REFERENCES TO MATERIALS AND EQUIPMENT ARE MADE. SUCH REFERENCES ARE MADE TO ESTABLISH THE STANDARDS OF QUALITY AND TYPE REQUIRED, AND NOT TO LIMIT COMPETITION. ACCEPTABLE MANUFACTURER'S OF COMPETITIVE PRODUCTS ARE LISTED IN APPLICABLE SECTIONS AS "APPROVED EQUALS". REASONABLE REQUESTS FOR SUBSTITUTION OR ADDITIONS TO "APPROVED EQUALS" WILL BE CONSIDERED, BUT THE ARCHITECT WILL BE THE SOLE JUDGE OF ACCEPTABILITY OF ITEMS PROPOSED AS SUBSTITUTES.

B. MATERIALS AND EQUIPMENT USED IN CARRYING OUT THESE SPECIFICATIONS SHALL BEAR UL OR OTHER RECOGNIZED TESTING LABORATORY LABEL WHEN SUCH LABELS ARE AVAILABLE.

PART 3 – EXECUTION

3.1 LOCATIONS
A. MECHANICAL LAYOUTS INDICATED ON DRAWINGS ARE DIAGRAMMATIC. EXACT LOCATIONS OF DUCT, AND EQUIPMENT MAY VARY BECAUSE OF CONFLICTS WITH WORK OF OTHER TRADES. WORK OUT CONFLICTS WHERE RELOCATION'S WILL NOT AFFECT OPERATION OR APPEARANCE OF SYSTEMS.
B. LOCATE EQUIPMENT REQUIRING PERIODIC SERVICING SO THAT IT IS READILY ACCESSIBLE. DO NOT BACK UP SERVICE SIDES TO WALLS, NOR PLACE IT TOO CLOSE TO OTHER EQUIPMENT TO MAKE SERVICE IMPRACTICAL. EQUIPMENT SERVICE CLEARANCE SHALL MEET MINIMUM ACCEPTABLE DISTANCE AS RECOMMENDED BY EQUIPMENT MANUFACTURER.

3.2 UTILITIES EXCAVATING AND BACKFILLING
A. PERFORM TRENCHING, EXCAVATING, BACKFILLING FOR MECHANICAL WORK IN ACCORDANCE WITH THE APPROPRIATE SECTIONS AND AS SET FORTH BELOW
1. PERFORM WORK NECESSARY FOR INSTALLATION OF MECHANICAL UTILITIES.
2. DEPTH OF EXCAVATION TO PROVIDE A MINIMUM OF 3' ABOVE TOP OF PIPE. EXCAVATION TO BE CARRIED TO A DEPTH OF AT LEAST 6" BELOW BOTTOM OF PIPE ELEVATION. FILL BELOW PIPE (6"), AROUND PIPE, AND A MINIMUM OF 12" ABOVE PIPE WIT SAND OR CLASS "B" CRUSHED STONE TAMPED FIRM AND EVEN. SEPARATE TOPSOIL DURING EXCAVATION. FINAL LAYER OR DIRT (12" MINIMUM) TO BE TOPSOIL. TRENCHES TO BE AT LEAST 18" WIDER THAN PIPE WITH BATTER BOARDS PLACED EVERY 25'. BACKFILLING SHALL BE DONE TO EXCLUDE USE OF ROCK OR STONE ABOVE SAND OR CRUSHED STONE.

3.3 CUTTING AND PATCHING
A. REPAIR OR REPLACE ROUTINE DAMAGE CAUSED BY CUTTING IN PERFORMANCE OF CONTRACT.
B. CORRECT UNNECESSARY DAMAGE CAUSED DUE TO INSTALLATION OF MECHANICAL WORK.
C. PERFORM REPAIRS WITH MATERIALS WHICH MATCH EXISTING AND INSTALL IN ACCORDANCE WITH THE APPROPRIATE SECTION OF THESE SPECIFICATIONS OR THE BEST STANDARDS OF THE INDUSTRY.

3.4 CONNECTION TO EQUIPMENT
A. CONNECT OR INSTALL EQUIPMENT SHOWN ON MECHANICAL DRAWINGS THAT REQUIRE MECHANICAL HOOKUPS.

3.5 SERVICE OF SYSTEM
A. IF EQUIPMENT IS PLACED IN SERVICE PRIOR TO ACCEPTANCE OF THE PROJECT, OPERATE EQUIPMENT STRICTLY IN ACCORDANCE WITH MANUFACTURER'S INSTRUCTIONS. INSTALL NEW FILTERS IN EQUIPMENT PRIOR TO OWNER OCCUPYING BUILDING
B. EMPLOY COMPETENT, QUALIFIED PERSONNEL IN OPERATION OF THE EQUIPMENT.
C. PROVIDE FOR PROPER OPERATION AND CLEANLINESS.
D. OPEN UP EQUIPMENT FOR INSPECTION AS DIRECTED BY THE SUPERINTENDENT.
E. LUBRICATE EQUIPMENT AND PERFORM SUCH OTHER MAINTENANCE AS REQUIRED TO PLACE IT IN FIRST CLASS OPERATING CONDITION.

END OF SECTION

SECTION 2
HEATING, VENTILATION AND AIR CONDITIONING

PART 1 – GENERAL

1.1 RELATED DOCUMENTS
A. REFER TO DRAWINGS AND CONTRACT FOR MATERIALS FURNISHED BY OWNER, INSTALLED BY CONTRACTOR OR FURNISHED AND INSTALLED BY OWNER.

1.2 SCOPE OF WORK
A. FURNISH ALL LABOR, SUPERVISION, AND EQUIPMENT (UNLESS EQUIPMENT IS SPECIFICALLY NOTED AS 'OWNER FURNISHED') FOR THE COMPLETE INSTALLATION OF HEATING, VENTILATION, AND AIR CONDITIONING SYSTEM TOGETHER WITH ALL NECESSARY AUXILIARIES AND APPURTENANCES.

1.3 QUALITY ASSURANCE
A. MANUFACTURER'S QUALIFICATIONS – INSTALL PACKAGED UNITS, AS INDICATED IN THE DRAWINGS, IN ACCORDANCE WITH MANUFACTURER'S INSTRUCTIONS AND REQUIREMENTS. PROVIDE RELATED PRODUCTS AND ACCESSORIES FROM ONE MANUFACTURER. STORE MATERIALS IN ACCORDANCE WITH MANUFACTURER'S RECOMMENDATION PROTECTING FROM DIRT, MOISTURE, CONTAMINANTS, AND WEATHER.
B. CODES AND STANDARDS – PERFORM ALL INSTALLATION IN ACCORDANCE WITH THE LATEST STANDARDS AS RECOGNIZED BY ASHRAE, SMACNA AND ALL APPLICABLE STATE AND LOCAL CODES AND ORDINANCES.
C. WORKMANSHIP – EXPERIENCED, WELL – TRAINED WORKERS, COMPETENT TO COMPLETE THE WORK AS SPECIFIED, SHALL PERFORM LABOR IN CONFORMANCE WITH GENERALLY ACCEPTED TRADE STANDARDS. INSTALL ALL EQUIPMENT SQUARE AND PLUMB ALLOWING ACCESS FOR PROPER OPERATION, ADJUSTMENT AND SERVICE.

1.4 STRUCTURAL AND SPACE CONDITIONS
A. ALL WORK SHALL AVOID OBSTRUCTIONS AND INTERFERENCE WITH OTHER TRADES, PRESERVE HEADROOM AND KEEP OPENINGS AND PASSAGEWAYS CLEAR AND FREE.

1.6 VIBRATION AND NOSE
A. INSTALL EACH OF THE VARIOUS PIECES OF EQUIPMENT TO OPERATE WITHOUT OBJECTIONABLE VIBRATION OR NOISE.

1.7 CUTTING AND PATCHING
A. CUTTING OR PATCHING NECESSARY TO PERMIT THE INSTALLATION OF ANY WORK UNDER THIS CONTRACT SHALL BE THE RESPONSIBILITY OF THIS TRADE. CUTTING AND PATCHING SHALL BE COORDINATED WITH OTHER TRADES SO AS NOT TO IMPACT OTHER WORK

1.8 BALANCING AND TESTING
A. TEST AND BALANCE SHALL BE PERFORMED BY A NATIONALLY QUALIFIED TEST AND BALANCE COMPANY. BALANCE CAOMPANY SHALL BE AN NEBB COMPANY.
B. CONTRACTOR SHALL COORDINATE TESTING WITH THE TESTING AND BALANCE COMPANY. ALL SYSTEMS SHALL BE FULLY OPERATIONAL PRIOR TO COMMENCEMENT OF TESTING. CORRECT ALL DEFICIENCIES NOTED IN THE TEST AND BALANCE REPORT WITHIN THREE DAYS OR PRIOR TO ACCEPTANCE OF THE PROJECT.
C. ASSUME RESPONSIBILITY FOR CORRECTING ALL ITEMS DETERMINED TO BE THE RESULT OF IMPROPER OR INCOMPLETE INSTALLATION. EXTRA TESTING REQUIRED DUE TO SUCH DEFICIENCIES WILL BE AT CONTRACTOR'S EXPENSE.
D. CONTRACTOR SHALL BE RESPONSIBLE FOR PROVIDING TEST REPORTS TO THE LOCAL BUILDING AND HEALTH DEPARTMENTS AS REQUIRED FOR CERTIFICATE OF OCCUPANCY.

PART 2 – PRODUCTS

2.1 AIR CONDITIONING UNITS, FANS AND AIR DEVICES
A. SHALL BE AS INDICATED ON THE DRAWINGS.

2.2 DUCTWORK
A. FABRICATION AND INSTALLATION, GENERAL – EXCEPT AS OTHERWISE INDICATED, FABRICATE AND INSTALL RECTANGULAR AND ROUND DUCTS IN ACCORDANCE WITH 2013 CMC CHAPTER 6 DUCT SYSTEMS. CONFORM TO THE REFERENCED SMACNA HVAC DUCT CONSTRUCTION STANDARDS FOR METAL AND FLEXIBLE DUCTS. AN APPROVED FLEXIBLE DUCT MAY BE USED FOR THE LAST 7 FT CONNECTION TO REGISTERS.

2.3 DUCT ACCESS PANELS AND DOORS
A. IN SHEET METAL WORK, HOLLOW CORE DOUBLE CONSTRUCTION OF SAME OR HEAVIER GAGE MATERIAL AS DUCT IN WHICH INSTALLED, PRODUCTS BY CESCO, VENT PRODUCTS, AIR BALANCE, OR EQUIVALENT.
1. PROVIDE VENTLOK OR APPROVED HINGES AND LATCHES ON ALL DOORS; 100 SERIES HINGES AND LATCHES ON LOW PRESSURE SYSTEM DOORS UP TO 18" MAXIMUM DIMENSION, 200 SERIES ON LARGER LOW PRESSURE SYSTEM DOORS AND 333 SERIES ON HIGH PRESSURE SYSTEMS.
2. CONSTRUCT DOORS UP TO 18" MAXIMUM DIMENSION WITH ONE INCH OVERLAP FIT AND GASKET WITH 3/4" BY 1/8" SPONGE RUBBER, FIT LARGER DOORS AGAIN 1-1/2" BY 1/8" FLAT STOCK OR ANGLE FRAME AND GASKET WITH 3/4" BY 1/8" SPONGE RUBBER OR FELT
3. DOOR SWING TO BE OPPOSITE OF AIRFLOW.

2.4 DUCTWORK SPECIALTIES
A. VOLUME AND SPLITTER DAMPERS
1. GALVANIZED SHEET METAL BLADE AND FRAME WITH VENTFABRICE INC. VENTLOK OPERATING HARDWARE.
2. FOR ACCESSIBLE DAMPERS, PROVIDE #641 SELF – LOCKING DIAL REGULATORS AND #644 SELF – LOCKING DIAL REGULATORS FOR INSULATED DUCTWORK, #637 SQUARE END BEARING, AND #635 SPRING END BEARING, AS APPLICABLE
3. FOR INACCESSIBLE DAMPERS, PROVIDE #666 OR #667 CONCEALED LOCKING DAMPER REGULATOR WITH BEARING AS ABOVE. FOR STATIC PRESSURES ABOVE 3" W.G., PROVIDE #640 HIVEL DIAL REGULATOR AND #609 HIVEL END BEARING FOR ACCESSIBLE DAMPERS.
B. MULTI – LOUVER VOLUME DAMPERS
1. 16 – GAUGE GALVANIZED STEEL FRAME. OPPOSED, 6" WIDE, 16 – GAUGE GALVANIZED STEEL BLADES. CONCEALED LINKAGE IN FRAME.
2. TITUS #AG – 35 – B, RUSKIN #CD35/ OBD OR EQUAL
C. FLEXIBLE CONNECTIONS
1. PROVIDE FLEXIBLE CONNECTORS AT THE DISCHARGE AND INLET OF FANS, AIR HANDLERS, ROTATING MECHANICAL EQUIPMENT, AND WHERE SHOWN AN THE DRAWINGS FOR PROPER VIBRATION ISOLATION.
2. NEOPRENE IMPREGNATED GLASS CLOTH WITH 24 – GAUGE GALVANIZED METAL FRAME. MINIMUM DIMENSIONS – 3" METAL, 3" FABRIC, 3" METAL.
3. DURO DYNE #MFN4, VENT FABRICS #VENTGLAS, Q INDUSTRIES, CONSOLIDATED KINETICS, ELGEN, OR EQUAL.
D. BACKDRAFT DAMPERS
1. PROVIDE COUNTERWEIGHT TYPE COMPLETE WITH FRAME, END BEARING, COUNTERBALANCE ASSEMBLY, BLADES, AND LINKAGE.
2. INSTALL AT OUTSIDE AIR INTAKE, EXHAUST OUTLETS, AND WHERE SHOWN ON DRAWINGS.
3. PACIFIC AIR PRODUCTS #PRD – 100AL, RUSKIN #CBS – 7 OR EQUAL BY AMERICAN WARMING. OR VENT PRODUCTS.
E. TURNING VANES
1.PROVIDE TURNING VANES AT ALL 90° AND 45° SQUARE ELBOWS. TURNING VANES SHALL BE DOUBLE WALL AIR FOIL TYPE CONSTRUCTED AND INSTALLED AS PER SMACNA.

2.5 DUCT INSULATION
A. ACCEPTABLE MANUFACTURERS: PROVIDE PRODUCTS OF THE FOLLOWING MANUFACTURES, COMPLYING WITH SPECIFIED REQUIREMENTS. EQUIVALENT PRODUCTS OF OTHER MANUFACTURERS WILL BE CONSIDERED.
1. OWENS – CORNING FIBERGLAS CORP.
2. MANVILLE PRODUCTS CORP.
3. CERTAINTEED CORP.

B. ALL INSULATION MATERIAL SHALL COMPLY WITH APPLICABLE ENERGY CONSERVATION REGULATION FOR PROJECT LOCATION.

C. PROVIDE COMPOSITE MECHANICAL INSULATION (INSULATION, JACKET, COVERINGS, SEALERS, MASTICS, AND ADHESIVES) WITH FLAME – SPEED INDEX OF 25 OR LESS, AND SMOKE – DEVELOPED INDEX OF 50 OR LESS, AS TESTED BY ASTM E84 (NFPA 255) METHOD.

D. PROVIDE STAPLES, BANDS, WIRES, TAPE, ANCHORS, CORNER ANGLES AND SIMILAR ACCESSORIES AS RECOMMENDED BY INSULATION MANUFACTURER FOR APPLICATIONS INDICATED.

E. PROVIDE CEMENTS, ADHESIVES, COATINGS, SEALERS, PROTECTIVE FINISHES, AND SIMILAR COMPOUNDS AS RECOMMENDED BY INSULATION MANUFACTURER FOR APPLICATIONS INDICATED.

2.6 REFRIGRANT PIPING
A. REFRIGRANT PIPING TO BE COPPER SEAMLESS, VACUUM PACKED TUBING.
B. ALL SUCTION LINES TO SLOPE BACK TOWARDS CONDENSING UNIT.
C. ALL SUCTION LINES HEADING UP TOWARDS CONDENSING UNIT SHALL HAVE A 'P' TRAP.
D. PROVIDE SIGHT GLASS AND FILTER DRIER ON LIQUID LINES AT CONDENSING UNITS.
E. ALL REFRIGRANT PIPING UNDERGROUND TO BE CONTAINED IN A PVC SLEEVE.
F. REFRIGRANT PIPING TO BE SIZED AND INSTALLED AS PER EQUIPMENT MANUFACTURERS RECOMMENDATIONS.
G. REFRIGRANT PIPING TO BE INSULATED WITH ARMAFLEX INSULATION.

2.7 HVAC CONTROLS
A. SHALL BE AS INDICATED ON THE DRAWINGS.
B. ELECTRIC AND ELECTRONIC HVAC CONTROLS – COMPONENTS AND OPERATING FEATURES AS INDICATED ON THE DRAWINGS.

PART 3 – EXECUTION

3.1 HVAC SYSTEM INSTALLATION, GENERAL
SEQUENCE, COORDINATE, AND INTEGRATE THE VARIOUS ELEMENTS OF MECHANICAL SYSTEMS, MATERIALS, AND EQUIPMENT. COMPLY WITH THE FOLLOWING REQUIREMENTS
1. COORDINATE MECHANICAL SYSTEMS, EQUIPMENT, AND MATERIALS WITH OTHER BUILDING COMPONENTS.
2. VERIFY ALL DIMENSIONS BY FIELD MEASUREMENTS.
3. ARRANGE FOR CHASES, SLOTS, AND OPENINGS IN OTHER BUILDING COMPONENTS DURING PROGRESS OF CONSTRUCTION, TO ALLOW FOR MECHANICAL INSTALLATIONS.
4. COORDINATE THE INSTALLATION OF REQUIRED SUPPORTING DEVICES AND SLEEVES TO BE SET IN POURED IN PLACE CONCRETE AND OTHER STRUCTURAL COMPONENTS, AS THEY ARE CONSTRUCTED.
5. SEQUENCE, COORDINATE, AND INTEGRATE INSTALLATIONS OF MECHANICAL MATERIALS AND EQUIPMENT FOR EFFICIENT FLOW OF THE WORK. GIVE PARTICULAR ATTENTION TO LARGE EQUIPMENT REQUIRING POSITIONING PRIOR TO CLOSING IN THE BUILDING.
6. WHERE MOUNTING HEIGHTS ARE NOT DETAILED OR DIMENSIONED, INSTALL SYSTEMS, MATERIALS, AND EQUIPMENT TO PROVIDE THE MAXIMUM HEADROOM POSSIBLE.
7. COORDINATE CONNECTION OF MECHANICAL SYSTEMS WITH EXTERIOR UNDERGROUND AND OVERHEAD UTILITIES AND SERVICES. COMPLY WITH REQUIREMENTS OF GOVERNING REGULATIONS, FRANCHISED SERVICE COMPANIES, AND CONTROLLING AGENCIES. PROVIDE REQUIRED CONNECTION FOR EACH SERVICE.
8. INSTALL SYSTEMS, MATERIALS, AND EQUIPMENT TO CONFORM WITH DRAWINGS AND SPECS, TO GREATEST EXTENT POSSIBLE. CONFORM TO ARRANGEMENTS INDICATED BY THE CONTRACT DOCUMENTS, RECOGNIZING THAT PORTIONS OF THE WORK ARE SHOWN ONLY IN DIAGRAMMATIC FORM. WHERE COORDINATION REQUIREMENTS CONFLICT WITH INDIVIDUAL SYSTEM REQUIREMENTS, REFER CONFLICT TO THE CONTRACTOR FOR RESOLUTION PRIOR TO INSTALLATION.
9. INSTALL SYSTEMS, MATERIALS, AND EQUIPMENT LEVEL AND PLUMB, PARALLEL AND PERPENDICULAR TO OTHER BUILDING SYSTEMS AND COMPONENTS, WHERE INSTALLED EXPOSED IN FINISHED SPACES OF EQUIPMENT COMPONENTS. AS MUCH AS PRACTICAL.
10. INSTALL MECHANICAL EQUIPMENT TO FACILITATE SERVICING, MAINTENANCE, AND REPAIR OR REPLACEMENT

2016 CALIFORNIA CALGREEN NOTES

PER SECTION 5.504.1.3, IF THE HVAC SYSTEM IS USED DURING CONSTRUCTION, USE OF RETURN AIR FILTERS WITH A MERV 8, BASED ON ASHRAE 52.2-1999, OR AVERAGE EFFICIENCY OF 30% BASED ON ASHRAE 52.1-1992. REPLACE ALL FILTERS IMMEDIATELY PRIOR TO OCCUPANCY, OR, IF THE BUILDING IS OCCUPIED DURING ALTERATION, AT CONCLUSION OF CONSTRUCTION.

PER SECTION 5.504.3, AT THE TIME OF ROUGH INSTALLATION AND DURING STORAGE ON THE CONSTRUCTION SITE AND UNTIL FINAL STARTUP OF THE HEATING, COOLING AND VENTILATING EQUIPMENT, ALL DUCT AND OTHER RELATED AIR DISTRIBUTION COMPONENT OPENINGS SHALL BE COVERED WITH TAPE, PLASTIC, SHEETMETAL, OR APPROVED METHODS TO REDUCE THE AMOUNT OF DUST, WATER AND DEBRIS WHICH MAY ENTER THE SYSTEM.

PER SECTION 5.504.5.3, IN MECHANICALLY VENTED BUILDINGS, PROVIDE REGULARLY OCCUPIED AREAS OF THE BUILDING WITH AIR FILTRATION MEDIA FOR OUTSIDE AND RETURN AIR THAT PROVIDES AT LEAST A MINIMUM EFFICIENCY REPORTING VALUE (MERV) OF 8. MERV 8 FILTERS SHALL BE INSTALLED PRIOR TO OCCUPANCY, AND RECOMMENDATIONS FOR MAINTENANCE WITH FILTERS OF THE SAME VALUE SHALL BE INCLUDED IN THE OPERATION AND MAINTENANCE MANUAL.

PER SECTION 5.508.1.1, INSTALL HVAC, REFRIGERATION AND FIRE SUPPRESSION EQUIPMENT THAT DO NOT CONTAIN CFC's.

DUCT SIZING REQUIREMENTS

0-90 CFM	600 FPM	.08 LOSS PER 100FT	6" DIAMETER
90-200 CFM	600 FPM	.08 LOSS PER 100FT	8" DIAMETER
200-375 CFM	700 FPM	.08 LOSS PER 100FT	10" DIAMETER
375-600 CFM	800 FPM	.08 LOSS PER 100FT	12" DIAMETER
600-900 CFM	875 FPM	.08 LOSS PER 100FT	14" DIAMETER
900-1200 CFM	900 FPM	.08 LOSS PER 100FT	16" DIAMETER
1200-1600 CFM	900 FPM	.08 LOSS PER 100FT	18" DIAMETER
1600-2000 CFM	900 FPM	.08 LOSS PER 100FT	20" DIAMETER
2000-2400 CFM	900 FPM	.08 LOSS PER 100FT	22" DIAMETER

NOTES:
1. ALL ELBOWS TO BE SMOOTH RADIUS
2. ALL FITTINGS TO BE OF INDUSTRY STANDARD TYPE WITH COEFFICIENTS PUBLISHED IN MANUAL Q
3. NC 30 DUCT SIZING

Klassen corporation
Architecture Construction
2021 Westwind Drive
Bakersfield, CA 93301
(661) 324-3000
(661) 324-3900 Fax
www.klassencorp.com

REGISTERED PROFESSIONAL ENGINEER FRANK J. CANTELMI No. 21190 MECHANICAL STATE OF CALIFORNIA

The above drawings and specifications and ideas, designs and arrangements represented thereby are and shall remain the property of the architect: and no part thereof shall be copied, disclosed to others or used in connection with any work or project other than the specific project for which they have been prepared and developed without the written consent of the architect. Visual contact with these drawings or specifications shall constitute conclusive evidence of acceptance of these restrictions.
Written dimensions on these drawings shall have precedence over scaled dimension: contractors shall verify and be responsible for, all dimensions and conditions on the job and this office must be notified of any variations from the dimensions and conditions shown by these drawings. Shop details must be submitted to this office for approval before proceeding with fabrication.

TENANT IMPROVEMENTS
SAN JOAQUIN VALLEY PULMONARY
5801 TRUXTUN AVE, BAKERSFIELD CA 933309

MARK	ISSUED FOR	DATE
△	OWNER SD SUBMITTAL	07/01/19
△	OWNER DD SUBMITTAL	07/31/19
△	OWNER CD SUBMITTAL	08/15/19
△		
△		
△		
△		

Project No. : C19-148

MECHANICAL GENERAL NOTES

M1.0

DEMOLITION KEYNOTES

1. REMOVE (E) SAD, CAPPED, EXTEND AND MODIFY DUCTS AS REQUIRED. SEE MECHANICAL FLOOR PLAN FOR NEW LAYOUT.
2. REMOVE (E) RAG, CAPPED, EXTEND AND MODIFY DUCTS AS REQUIRED. SEE MECHANICAL FLOOR PLAN FOR NEW LAYOUT.
3. REMOVE (E) EXHAUST FAN
4. (E) 2 TON WALL MOUNTED FAN COIL TO REMAIN
5. REMOVE (E) EAG
6. REMOVE (E) WALL MOUNTED EAG ABOVE CEILING
7. REMOVE (E) DUCT, MODIFY/CAPPED AS REQUIRED.
8. CAPPED (E) RA DTR TRANSITION FROM (E) AC UNIT RA CONNECTION.
9. (E) REFRIG PIPING CONNECTION TO (E) FAN COIL TO REMAIN
10. (E) 2 TON CONDENSING UNIT AT ROOF TO REMAIN.
11. CAPPED (E) SA DROP IN STUD WALL
12. RELOCATE (E) THERMOSTAT AND ALL ASSOCIATED ITEM – SEE MECHANICAL FLOOR PLAN FOR NEW LOCATION
13. RELOCATE (E) SMOKE DETECTOR AND ALL ASSOCIATED ITEM – SEE MECHANICAL FLOOR PLAN FOR NEW LOCATION
14. CUT/CAPPED DISCONTINUE PORTION OF EXISTING DUCT.
15. DISCONNECT SECTION OF (E) DUCT, CAPPED END JOINT.
16. EXISTING SAD TO REMAIN, SEE MECHANICAL FLOOR PLAN FOR NEW DUCT LAYOUT.
17. EXISTING AC UNIT TO REMAIN
18. REMOVE (E) 2 TON AC UNIT, REPLACE WITH 3 TON COMMERCIAL GRADE WITH ADDITION OF HEPA FILTER

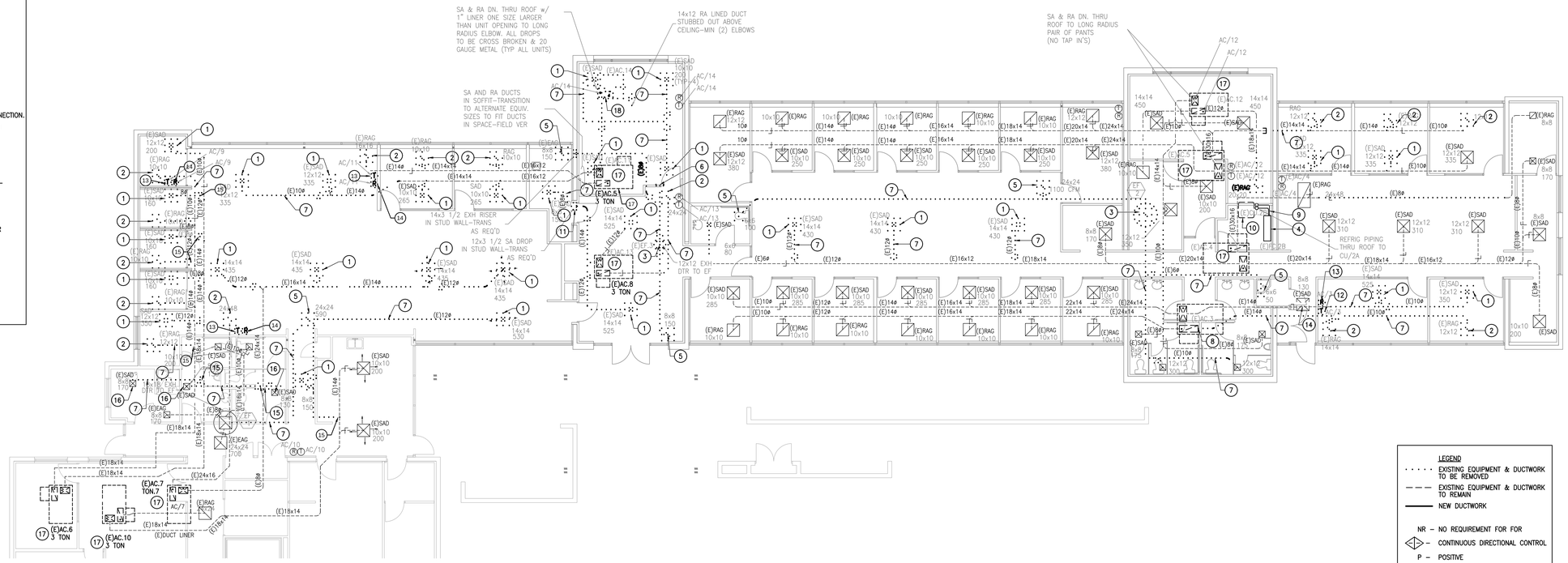

MECHANICAL DEMOLITION PLAN

SCALE: 1/8" = 1'-0"

LEGEND

- EXISTING EQUIPMENT & DUCTWORK TO BE REMOVED
- EXISTING EQUIPMENT & DUCTWORK TO REMAIN
- NEW DUCTWORK

NR – NO REQUIREMENT FOR FOR
◇ – CONTINUOUS DIRECTIONAL CONTROL
P – POSITIVE
N – NEGATIVE

MECHCANICAL FLOOR PLAN KEYNOTES

1. 90% FILTER BANK MTD IN (E) SUPPLY AIR FROM UNIT IN ATTIC. LOCATE TO PROVIDE ACCESS THRU CEILING. FIELD VERIFY FOR EXACT LOCATION
2. GREENKECK ENERGY RECOVERY VENTILATOR
3. EXISTING AC UNIT TO REMAIN
4. ATTACHED NEW SAD DUCT TO EXISTING DUCT, EXTEND, MODIFY (E) DUCT AS REQUIRED, SEE PLAN FOR DIFFUSER SIZE.
5. ATTACHED NEW RAG DUCT TO EXISTING DUCT, EXTEND, MODIFY (E) DUCT AS REQUIRED, SEE PLAN FOR GRILLE SIZE.
6. RELOCATED (E) RAG. FIELD VERIFY
7. EXISTING MINI SPLIT TO REMAIN
8. EXHAUST DUCT AT DRYER VENT THROUGH EXTERIOR WALL WITH GI FLAPPER TYPE PORT AND VERMIN RESISTANT SCREEN

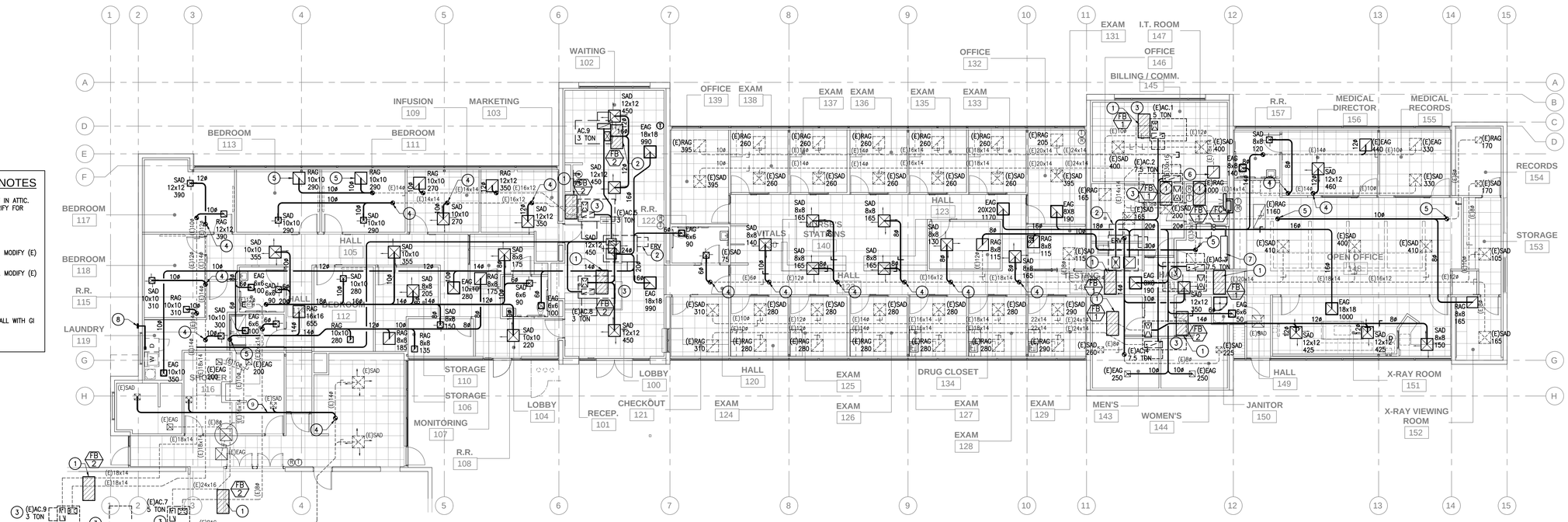

MECHANICAL FLOOR PLAN

SCALE: 1/8" = 1'-0"

Klassen corporation
Architecture Construction
2021 Westwind Drive
Bakersfield, CA 93301
(661) 324-3000
(661) 324-3900 Fax
www.klassencorp.com

REGISTERED PROFESSIONAL ENGINEER
FRANK J. CARTER
No. 21190
MECHANICAL
STATE OF CALIFORNIA

The above drawings and specifications and ideas, designs and arrangements represented thereby are and shall remain the property of the architect and no part thereof shall be copied, disclosed to others or used in connection with any work or project other than the specific project for which they have been prepared and developed without the written consent of the architect. Visual contact with these drawings or specifications shall constitute conclusive evidence of acceptance of these restrictions.

Written dimensions on these drawings shall have precedence over scaled dimension; contractors shall verify and be responsible for, all dimensions and conditions on the job and this office must be notified of any variation from the dimensions and conditions shown by these drawings. Shop details must be submitted to this office for approval before proceeding with fabrication.

TENANT IMPROVEMENTS
SAN JOAQUIN VALLEY PULMONARY
5801 TRUXTUN AVE, BAKERSFIELD CA 933309

DATE	ISSUED FOR	MARK
07/01/19	OWNER SD SUBMITTAL	
07/31/19	OWNER DD SUBMITTAL	
08/15/19	OWNER CD SUBMITTAL	

Project No. : C19-148

MECHANICAL PLANS

M2.0

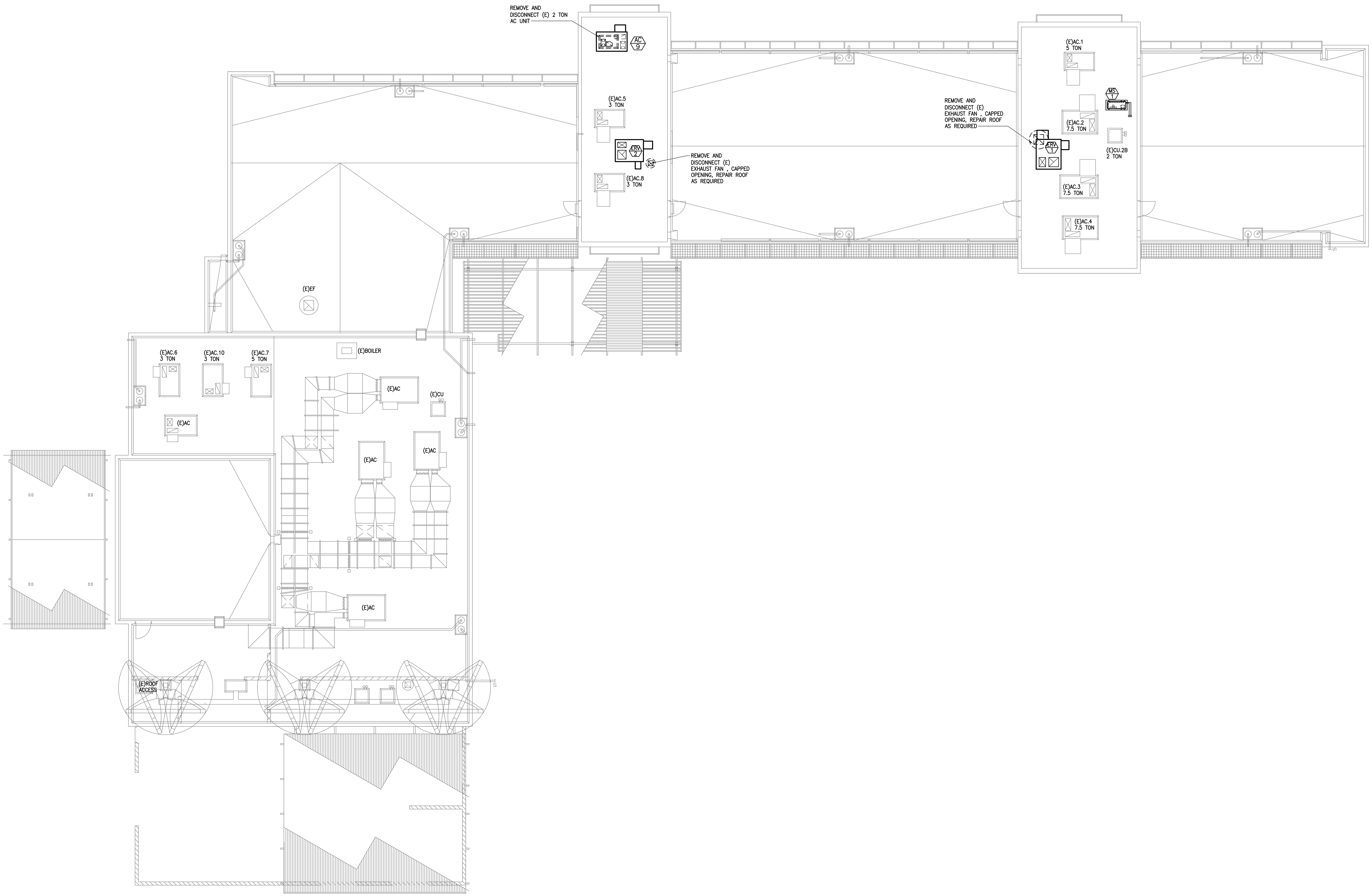

MECHANICAL ROOF PLAN

SCALE: 1/8" = 1'-0"

Klassen corporation
Architecture Construction
2021 Westwind Drive
Bakersfield, CA 93301
(661) 324-3000
(661) 324-3900 Fax
www.klassencorp.com

REGISTERED PROFESSIONAL ENGINEER
FRANK J. CANTELMI
No. 21190
MECHANICAL
STATE OF CALIFORNIA

The above drawings and specifications and ideas, designs and arrangements represented thereby are and shall remain the property of the architect: and no part thereof shall be copied, disclosed to others or used in connection with any work or project other than the specific project for which they have been prepared and developed without the written consent of the architect. Visual contact with these drawings or specifications shall constitute conclusive evidence of acceptance of these restrictions.

Written dimensions on these drawings shall have precedence over scaled dimension: contractors shall verify and be responsible for, all dimensions and conditions on the job and this office must be notified of any variations from the dimensions and conditions shown by these drawings. Shop details must be submitted to this office for approval before proceeding with fabrication.

TENANT IMPROVEMENTS
SAN JOAQUIN VALLEY PULMONARY
5801 TRUXTUN AVE, BAKERSFIELD CA 933309

MARK	ISSUED FOR	DATE
△	OWNER SD SUBMITTAL	07/01/19
△	OWNER DD SUBMITTAL	07/31/19
△	OWNER CD SUBMITTAL	08/15/19
△		
△		
△		
△		

Project No. : C19-148

MECHANICAL ROOF PLAN

M3.0

REGISTER SCHEDULE

SYMBOL	TYPE
SIZE CFM	SAD–SUPPLY AIR CEILING DIFFUSER
SIZE CFM	SAR–SUPPLY AIR WALL REGISTER
SIZE CFM	LRR–LINEAR RETURN AIR SLOT REGISTER
SIZE CFM	RAG–RETURN AIR CEILING REGISTER
SIZE CFM	FRAG–FILTERED RETURN AIR CEILING REGISTER
SIZE CFM	RAG–RETURN AIR WALL REGISTER
SIZE CFM	EAG–EXHAUST AIR CEILING REGISTER
SIZE CFM	EAG–EXHAUST AIR WALL REGISTER
SIZE	TG–TRANSFER GRILLE

REGISTERS TO BE TITUS OR EQUAL

SAD–SUPPLY 'T'BAR CEILING–#MCD–3 w/OBD
SUPPLY HARD SURFACE–#MCD–1 w/OBD
SUPPLY SIDE WALL–#300RL w/OBD

SAR–SUPPLY SIDE WALL–#300RL w/OBD
DOUBLE DEFLECTION

RAG–RETURN 'T'BAR CEILING–#50F w/OBD
BORDER TYPE 3
RETURN SURFACE MOUNT–#50F w/OBD
BORDER TYPE 1
RETURN SIDE WALL–#350RL w/OBD

FRAG–FILTERED RETURN GRILLE 'T'BAR MOUNT
#50FF w/OBD–BORDER TYPE 3
FILTERED RETURN GRILLE SURFACE MOUNT
#50FF w/OBD–BORDER TYPE 1

EAG–EXHAUST 'T'BAR CEILING–#50R–NT w/OBD
EXHAUST HARD SURFACE–#50R w/OBD
EXHAUST SIDE WALL–#350RS w/OBD

SEE PLAN FOR ALL SIZES.

SEE PLAN FOR SUPPLY AIR THROWS.

CORDINATE REGISTERS w/CEILING GRID & LIGHTING.

NOTE! ALL REGISTERS AND DIFFUSERS ARE TO BE FINISHED WITH FACTORY–APPLIED BAKED ENAMEL PAINT OVER A RUST–PROOFING PRIMER. WHERE FIELD PAINTING IS TO BE DONE, A RUST–PROOFING PRIMER MUST BE PROVIDED.

FILTER BANKS

MARK	DESCRIPTION
FB 1	FARR #3P GLIDE/PACK FILTER BANK CABINET & DOORS – WEATHERPROOF FOR OUTSIDE INSTALLATION, INSULATED, PRIMED FOR PAINTING – 36"Wx27.25"Hx21"L (1) 24x24x12 & (1) 24x12x12 RIGA–FLO 200 FILTERS – ASHRAE 52.1–1992 90–95% EFF. ASHRAE 52.2–1999 MERV 14 – DWYER FILTER GAGE; INSTALL ACROSS THE FILTER BED. GAUGE SHALL BE RED LINED TO INDICATE WHEN THE RECOMMENDED MAXIMUM STATIC PRESSURE DROP HAS BEEN REACHED. (2016 CMC 408.1.1) FILTERS SHALL MEET ASHRAE STANDARDS AS PER CMC, CHAPTER 4, TABLE 4–B – 225 LBS
FB 2	FARR #3P GLIDE/PACK FILTER BANK CABINET & DOORS – WEATHERPROOF FOR OUTSIDE INSTALLATION, INSULATED, PRIMED FOR PAINTING – 24"Wx27.25"Hx21"L (1) 24x24x12 RIGA–FLO 200 FILTER ASHRAE 52.1–1992 90–95% EFF. ASHRAE 52.2–1999 MERV 14 – DWYER FILTER GAGE; INSTALL ACROSS THE FILTER BED. GAUGE SHALL BE RED LINED TO INDICATE WHEN THE RECOMMENDED MAXIMUM STATIC PRESSURE DROP HAS BEEN REACHED. (2016 CMC 408.1.1) FILTERS SHALL MEET ASHRAE STANDARDS AS PER CMC, CHAPTER 4, TABLE 4–B 150 LBS

ENERGY RECOVERY AC UNIT

MARK	DESCRIPTION
ERV 1	GREENHECK #ERVe–45–30L ROOF MOUNTED ENERGY RECOVERY VENTILATOR OUTDOOR AIR: 4105 CFM AT .8"ESP– 5 HP – EXHAUST: 3940 CFM AT .8" ESP 3 HP BELT DRIVE 2" PLEATED MERV 8 FILTERS FOR OUTDOOR AND EXHAUST AIR HINGED DOORS INSULATED CASING – WEATHER HOODS DOUBLE WALL CONSTRUCTION SINGLE POINT POWER – FACTORY WIRED NON–FUSED DISCONNECT SWITCH – FACTORY SLOPED ROOF CURB 32.7 MCA @ 208/230v/3ø, 45 MOP – 1930 LBS
ERV 2	GREENHECK #ERVe–35–30L ROOF MOUNTED ENERGY RECOVERY VENTILATOR OUTDOOR AIR: 3145 CFM AT .8"ESP– 3 HP – EXHAUST: 3325 CFM AT .8" ESP 3 HP BELT DRIVE 2" PLEATED MERV 8 FILTERS FOR OUTDOOR AND EXHAUST AIR HINGED DOORS INSULATED CASING – WEATHER HOODS DOUBLE WALL CONSTRUCTION SINGLE POINT POWER – FACTORY WIRED NON–FUSED DISCONNECT SWITCH – FACTORY SLOPED ROOF CURB 24.5 MCA @ 208/230v/3ø, 35 MOP – 1640 LBS

PACKAGED ROOFTOP UNITS

MARK	DESCRIPTION
AC 1	EXISTING 5 TON SINGLE PACKAGE ROOFTOP UNIT – ELECTRIC CLG & GAS HTG SET @ 900 CFM @ 1.6"ESP – PROVIDE HIGH STATIC DRIVES & BELT AS REQ'D TO MEET DESIGN – UNIT POWER EXHAUST & ECONOMIZER TO BE DISCONNECTED AND REMOVED CAP, OSA AND EXHAUST OPENINGS. FIELD VERIFY FOR ALL REQ'D MODIFICATIONS PER MFG'RS RECOMMENDATIONS
AC 2	EXISTING 7.5 TON SINGLE PACKAGE ROOFTOP UNIT – ELECTRIC CLG & GAS HTG SET @ 3000 CFM @ 1.6"ESP – PROVIDE HIGH STATIC DRIVES & BELT AS REQ'D TO MEET DESIGN – UNIT POWER EXHAUST & ECONOMIZER TO BE DISCONNECTED AND REMOVED, CAP OSA AND EXHAUST OPENINGS. FIELD VERIFY FOR ALL REQ'D MODIFICATIONS PER MFG'RS RECOMMENDATIONS
AC 3	EXISTING 7.5 TON SINGLE PACKAGE ROOFTOP UNIT – ELECTRIC CLG & GAS HTG SET @ 3000 CFM @ 1.6"ESP – PROVIDE HIGH STATIC DRIVES & BELT AS REQ'D TO MEET DESIGN – UNIT POWER EXHAUST & ECONOMIZER TO BE DISCONNECTED AND REMOVED CAP, OSA AND EXHAUST OPENINGS. FIELD VERIFY FOR ALL REQ'D MODIFICATIONS PER MFG'RS RECOMMENDATIONS
AC 4	EXISTING 7.5 TON SINGLE PACKAGE ROOFTOP UNIT – ELECTRIC CLG & GAS HTG SET @ 3000 CFM @ 1.6"ESP – PROVIDE HIGH STATIC DRIVES & BELT AS REQ'D TO MEET DESIGN – UNIT POWER EXHAUST & ECONOMIZER TO BE DISCONNECTED AND REMOVED CAP, OSA AND EXHAUST OPENINGS. FIELD VERIFY FOR ALL REQ'D MODIFICATIONS PER MFG'RS RECOMMENDATIONS
AC 5	EXISTING 3 TON SINGLE PACKAGE ROOFTOP UNIT – ELECTRIC CLG & GAS HTG SET @ 1200 CFM @ 1.6"ESP – PROVIDE HIGH STATIC DRIVES & BELT AS REQ'D TO MEET DESIGN – UNIT POWER EXHAUST & ECONOMIZER TO BE DISCONNECTED AND REMOVED CAP, OSA AND EXHAUST OPENINGS. FIELD VERIFY FOR ALL REQ'D MODIFICATIONS PER MFG'RS RECOMMENDATIONS
AC 6	EXISTING 3 TON SINGLE PACKAGE ROOFTOP UNIT – ELECTRIC CLG & GAS HTG SET @ 1000 CFM @ 1.6"ESP – PROVIDE HIGH STATIC DRIVES & BELT AS REQ'D TO MEET DESIGN – UNIT POWER EXHAUST & ECONOMIZER TO BE DISCONNECTED AND REMOVED CAP, OSA AND EXHAUST OPENINGS. FIELD VERIFY FOR ALL REQ'D MODIFICATIONS PER MFG'RS RECOMMENDATIONS
AC 7	EXISTING 5 TON SINGLE PACKAGE ROOFTOP UNIT – ELECTRIC CLG & GAS HTG SET @ 2000 CFM @ 1.6"ESP – PROVIDE HIGH STATIC DRIVES & BELT AS REQ'D TO MEET DESIGN – UNIT POWER EXHAUST & ECONOMIZER TO BE DISCONNECTED AND REMOVED CAP, OSA AND EXHAUST OPENINGS. FIELD VERIFY FOR ALL REQ'D MODIFICATIONS PER MFG'RS RECOMMENDATIONS
AC 8	EXISTING 3 TON SINGLE PACKAGE ROOFTOP UNIT – ELECTRIC CLG & GAS HTG SET @ 900 CFM @ 1.6"ESP – PROVIDE HIGH STATIC DRIVES & BELT AS REQ'D TO MEET DESIGN – UNIT POWER EXHAUST & ECONOMIZER TO BE DISCONNECTED AND REMOVED CAP, OSA AND EXHAUST OPENINGS. FIELD VERIFY FOR ALL REQ'D MODIFICATIONS PER MFG'RS RECOMMENDATIONS
AC 9	NOM. 3.0 TON – CARRIER #48HCLA04A3A5–A0A0A0 SINGLE–PACKAGE ROOFTOP UNIT ELECTRIC CLG & GAS HTG – 15.0 SEER – 900 CFM @ 1.6"ESP – HIGH STATIC BELT DRIVE – 1 STAGE COOLING @ AHRI RATINGS – HTG; 60,000 BTUH GAS INPUT, 49,000 BTUH OUTPUT – MICROMETL ULTRA LOW LEAK ECONOMIZER WITH BAROMETRIC RELIEF, HONEYWELL CONTROLS, DRY BULB SENSOR, HOOD BASE ELECTROMECH CONTROLS – MICROMETL SLOPED ROOF CURB – FLUE DEFLECTOR – POWERED CONVENIENCE OUTLET – 30 MCA @ 460v/3ph, 35 MOCP – 870 LBS

ROOM	A AREA (SF)	B CEILING HT. (FEET)	C VOLUME (CU.FT.) (A x B)	D MIN TOTAL ACH PER HR. (TABLE 4-A)	E MIN SYSTEM CFM (SA)	F MIN. OUTDOOR ACH PER HR (TABLE 4-A)	G MIN OSA	DESIGN CFM SA	RA	OSA	EXH	PRESSURE
AC-1 (EX 5 TON)												
145 BILLING DEPT.	438	10	4380	4	292	2	146	1000	1000	370	-	NR
146 OFFICE	92	10	920	4	61	2	31	165	165	61	-	NR
143 MENS	170	10	1700	10	283	NR	-	260	-	-	290	N
144 WOMENS	151	10	1510	10	252	NR	-	225	-	-	250	N
142 TESTING	78	10	780	6	78	2	26	150	-	56	150	NR
141 HALL	114	10	1140	4	76	2	38	200	95	74	-	NR
150 JANITOR	27	10	270	10	45	NR	-	-	-	-	50	NR
TOTALS	**1070**				**1087**		**241**	**2000**	**1260**	**740**	**740**	
AC-2 (EX 7.5 TON)												
155 MEDICAL RECORDS	149	10	1490	4	99	2	50	335	-	123	330	NR
156 MEDICAL DIRECTOR	194	10	1940	4	129	2	65	455	-	167	440	NR
157 R.R	74	10	740	10	123	NR	-	120	-	-	140	N
132 OFFICE	172	10	1720	4	115	2	57	395	205	145	190	NR
133 EXAM	113	10	1130	6	113	2	38	260	260	95	-	NR
135 EXAM	113	10	1130	6	113	2	38	260	260	95	-	NR
136 EXAM	113	10	1130	6	113	2	38	260	260	95	-	NR
137 EXAM	113	10	1130	6	113	2	38	260	260	95	-	NR
138 EXAM	113	10	1130	6	113	2	38	260	260	95	-	NR
139 OFFICE	172	10	1720	4	115	2	57	395	395	145	-	NR
TOTALS	**1326**				**1146**		**417**	**3000**	**1900**	**1100**	**1100**	
AC-3 (EX 7.5 TON)												
154 RECORDS	113	10	1130	4	75	2	38	170	170	72	-	NR
153 STORAGE	93	10	930	4	62	2	31	105	*	44	-	NR
148 OPEN OFFICE	704	10	7040	4	469	2	235	1220	*	512	**	NR
149 HALL	47	10	470	4	31	2	16	55	*	23	**	NR
152 X-RAY VIEWING ROOM	103	10	1030	6	103	2	34	165	165	69	-	NR
131 EXAM	78	10	780	6	78	2	26	115	115	48	-	NR
134 DRUG CLOSET	104	10	1040	4	69	2	35	130	130	55	-	NR
140 NURSE'S STATION	214	10	2140	6	214	2	71	315	*	132	**	NR
130 VITALS	22	10	220	6	22	2	7	30	*	13	**	NR
123 HALL	565	10	5650	4	377	2	188	620	*	260	**	NR
122 R.R	67	10	670	10	112	NR	-	75	-	32	90	N
TOTALS	**2110**				**1613**		**681**	**3000**	**1740**	**1260**	**1100**	
AC-4 (EX 7.5 TON)												
121 CHECKOUT	112	10	1120	6	112	2	37	310	310	104	-	NR
124 EXAM	108	10	1080	6	108	2	36	280	280	94	-	NR
125 EXAM	108	10	1080	6	108	2	36	280	280	94	-	NR
126 EXAM	108	10	1080	6	108	2	36	280	280	94	-	NR
127 EXAM	108	10	1080	6	108	2	36	280	280	94	-	NR
128 EXAM	108	10	1080	6	108	2	36	280	280	94	-	NR
129 EXAM	112	10	1120	6	112	2	37	290	290	97	-	NR
151 XRAY ROOM	331	10	3310	6	331	2	110	1000	-	384	1000	NR
TOTALS	**1095**				**1095**		**365**	**3000**	**2000**			
AC-5 (EX 3 TON)												
103 MARKETING	183	10	1830	6	183	2	61	350	145	139	205	NR
109 INFUSION	141	10	1410	6	141	2	47	270	-	107	240	P
111 BEDROOM	162	9	1458	4	97	2	49	290	290	115	-	NR
113 BEDROOM	162	9	1458	4	97	2	49	290	290	115	-	NR
TOTALS	**648**				**518**		**205**	**1200**	**725**	**476**	**445**	
AC-6 (EX 3 TON)												
118 BEDROOM	162	10	1620	4	108	2	54	310	310	93	-	NR
117 BEDROOM	204	10	2040	4	136	2	68	390	390	117	-	NR
119 JANITOR/LAUNDRY	159	10	1590	10	265	NR	-	300	-	90	330	N
TOTALS	**525**				**509**		**122**	**1000**	**700**	**300**	**330**	
AC -7 (EX 5 TON)												
105 HALL	329	9	2961	4	197	2	99	525	250	150	280	NR
107 MONITORING	93	10	930	6	93	2	31	175	175	50	-	NR
108 R.R	57	10	570	10	95	NR	-	90	-	-	100	N
114 HALL	115	9	1035	4	69	2	35	185	185	53	-	NR
110 STORAGE	127	10	1270	2	42	NR	-	205	185	58	-	NR
106 STORAGE	81	10	810	10	135	NR	-	150	135	43	-	NR
112 BEDROOM	150	9	1350	4	90	2	45	280	280	80	-	NR
115 R.R	62	9	558	10	93	NR	-	90	-	-	100	N
116 SHOWER	60	9	540	10	90	NR	-	80	-	-	90	N
104 LOBBY	106	10	1060	4	71	2	36	220	220	63	-	NR
TOTALS	**1180**				**975**		**209**	**2000**	**1430**	**570**	**570**	
AC -9 / AC -8(EX 3 TON)												
100 LOBBY/102 WAITING	901	10	9010	10	1502	10	1502	1800	-	1800	1980	N
TOTALS	**901**				**1502**		**1502**	**1800**	**0**	**0**	**1980**	
MS-1												
158 IT ROOM	56	10	560	10	93	10	19					NR
TOTALS	**56**				**93**		**19**	**0**		**0**	**0**	

NOTES:
* RETURN AIR INCLUDED WITH OVERALL RAG IN OPEN AREA.
** EXHAUST AIR INCLUDED WITH OVERALL EAG

Klassen corporation
Architecture Construction
2021 Westwind Drive
Bakersfield, CA 93301
(661) 324-3000
(661) 324-3900 Fax
www.klassencorp.com

The above drawings and specifications and ideas, designs and arrangements represented thereby are and shall remain the property of the architect: and no part thereof shall be copied, disclosed to others or used in connection with any work or project other than the specific project for which they have been prepared and developed without the written consent of the architect. Visual contact with these drawings or specifications shall constitute conclusive evidence of acceptance of these restrictions.
Written dimensions on these drawings shall have precedence over scaled dimension: contractors shall verify and be responsible for, all dimensions and conditions on the job and this office must be notified of any variations from the dimensions and conditions shown by these drawings. Shop details must be submitted to this office for approval before proceeding with fabrication.

TENANT IMPROVEMENTS
SAN JOAQUIN VALLEY PULMONARY
5801 TRUXTUN AVE, BAKERSFIELD CA 933309

MARK	ISSUED FOR	DATE
△	OWNER SD SUBMITTAL	07/01/19
△	OWNER DD SUBMITTAL	07/31/19
△	OWNER CD SUBMITTAL	08/15/19
△		
△		
△		
△		

Project No. : C19-148

MECHANICAL SCHEDULES

M4.0

17 N.T.S.

18 N.T.S.

19 N.T.S.

20 N.T.S.

13 N.T.S.

14 N.T.S.

15 N.T.S.

16 N.T.S.

9 CONTROL DIAGRAM - MINI SPLIT-TYP N.T.S.

LEGEND

E FURNISHED, INSTALLED, & WIRED BY ELECTRICAL CONTRACTOR

M FURNISHED, INSTALLED, & WIRED BY MECHANICAL CONTRACTOR

ALL CONTROL WIRING & CONDUIT INCLUDING LINE & LOW VOLTAGE FURNISHED & INSTALLED BY MECHANICAL CONTRACTOR

ALL POWER WIRING & CONDUIT INCLUDING LINE & LOW VOLTAGE FURNISHED & INSTALLED BY ELECTRICAL CONTRACTOR

MS.2 TO BE SET TO RUN 24/7.

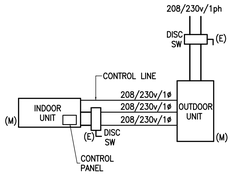

10 CONTROL DIAGRAM N.T.S.

NOTE

1. SUPPLY AIR FAN TO BE WIRED TO RUN CONTINUOUS DURING OCCUPIED HOURS
2. INTERLOCK RELATED EXHAUST FAN TO RUN AT THE SAME TIME AS THE UNIT SUPPLY FAN
3. ALL CONTROL WIRING & CONDUIT INCLUDING LINE & LOW VOLTAGE FURNISHED & INSTALLED BY MECHANICAL CONTRACTOR
4. ALL POWER WIRING & CONDUIT INCLUDING LINE & LOW VOLTAGE FURNISHED & INSTALLED BY ELECTRICAL CONTRACTOR

LEGEND

E FURNISHED, INSTALLED, & WIRED BY ELECTRICAL CONTRACTOR

M FURNISHED, INSTALLED, & WIRED BY MECHANICAL CONTRACTOR

ME FURNISHED & INSTALLED BY MECHANICAL & WIRED BY ELECTRICAL

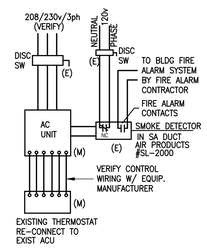

11 EXISTING AC UNIT CONTROL DIAGRAM N.T.S.

NOTE

1. SUPPLY AIR FAN TO BE WIRED TO RUN CONTINUOUS DURING OCCUPIED HOURS
2. INTERLOCK RELATED EXHAUST FAN TO RUN AT THE SAME TIME AS THE UNIT SUPPLY FAN
3. ALL CONTROL WIRING & CONDUIT INCLUDING LINE & LOW VOLTAGE FURNISHED & INSTALLED BY MECHANICAL CONTRACTOR
4. ALL POWER WIRING & CONDUIT INCLUDING LINE & LOW VOLTAGE FURNISHED & INSTALLED BY ELECTRICAL CONTRACTOR

LEGEND

E FURNISHED, INSTALLED, & WIRED BY ELECTRICAL CONTRACTOR

M FURNISHED, INSTALLED, & WIRED BY MECHANICAL CONTRACTOR

ME FURNISHED & INSTALLED BY MECHANICAL & WIRED BY ELECTRICAL

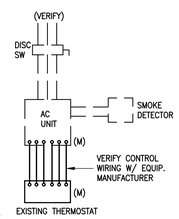

12 N.T.S.

5 DUCT HANGER - TYP. N.T.S.

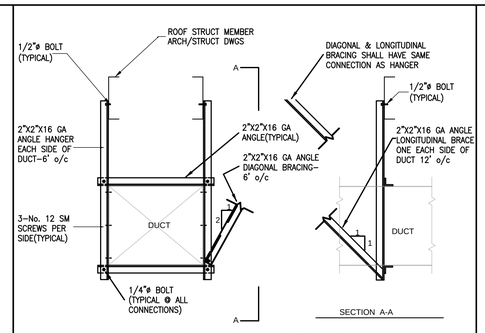

TYPICAL FOR RECT. DUCT LARGER THAN 28"sq

DETAIL SHOWN FOR REFERENCE ONLY – CONTRACTOR TO INSTALL PER 2016 CMC CHAPTER 6 & SMACNA GUIDELINES FOR SEISMIC RESTRAINTS OF MECHANICAL SYSTEMS & PLUMBING PIPING SYSTEMS.

6 DUCT HANGER - TYP N.T.S.

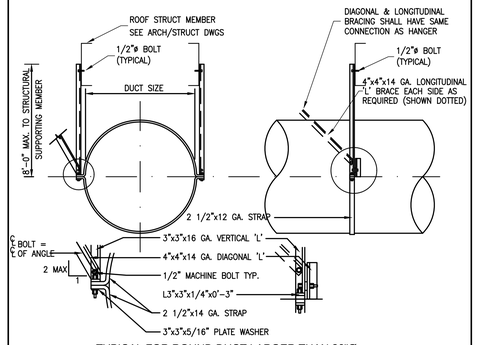

TYPICAL FOR ROUND DUCT LARGER THAN 26"Ø

DETAIL SHOWN FOR REFERENCE ONLY – CONTRACTOR TO INSTALL PER 2016 CMC CHAPTER 6 & SMACNA GUIDELINES FOR SEISMIC RESTRAINTS OF MECHANICAL SYSTEMS & PLUMBING PIPING SYSTEMS.

7 DUCT HANGER - TYP N.T.S.

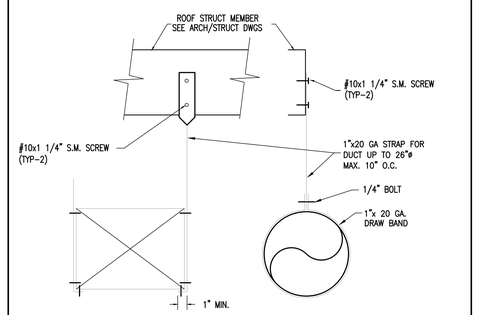

DETAIL SHOWN FOR REFERENCE ONLY – CONTRACTOR TO INSTALL PER 2016 CMC CHAPTER 6 & SMACNA GUIDELINES FOR SEISMIC RESTRAINTS OF MECHANICAL SYSTEMS & PLUMBING PIPING SYSTEMS.

8 N.T.S.

1 AC UNIT MOUNTING N.T.S.

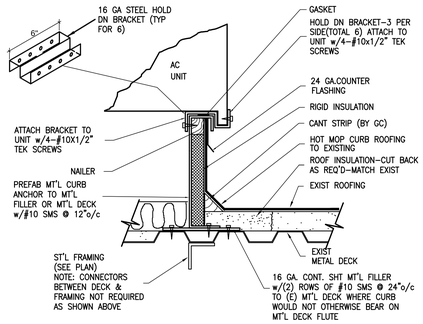

2 ERV UNIT MOUNTING N.T.S.

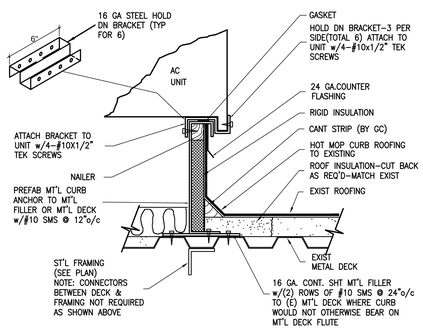

3 FILTER CABINET MTG - TYP N.T.S.

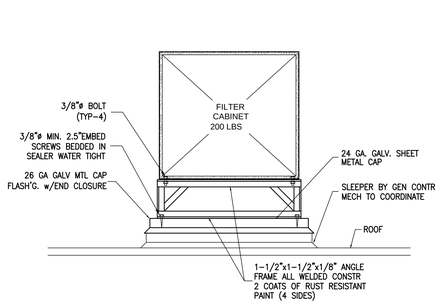

4 FAN-COIL UNIT MTG - MS-1 N.T.S.

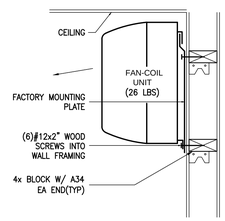

INDOOR UNIT

Klassen corporation
Architecture Construction
2021 Westwind Drive
Bakersfield, CA 93301
(661) 324-3000
(661) 324-3900 Fax
www.klassencorp.com

REGISTERED PROFESSIONAL ENGINEER FRANK J. CANTELLA No. 21190 MECHANICAL STATE OF CALIFORNIA

The above drawings and specifications and ideas, designs and arrangements represented thereby are and shall remain the property of the architect and no part thereof shall be copied, disclosed to others or used in connection with any work or project other than the specific project for which they have been prepared and developed without the written consent of the architect. Visual contact with these drawings or specifications shall constitute conclusive evidence of acceptance of these restrictions.

Written dimensions on these drawings shall have precedence over scaled dimension; contractors shall verify and be responsible for, all dimensions and conditions on the job and this office must be notified of any variation from the dimensions and conditions shown by these drawings. Shop details must be submitted to this office for approval before proceeding with fabrication.

TENANT IMPROVEMENTS
SAN JOAQUIN VALLEY PULMONARY
5801 TRUXTUN AVE, BAKERSFIELD CA 933309

MARK	ISSUED FOR	DATE
	OWNER SD SUBMITTAL	07/01/19
	OWNER DD SUBMITTAL	07/31/19
	OWNER CD SUBMITTAL	08/15/19

Project No. : C19-148

MECHANICAL DETAILS

M5.0

LIGHT FIXTURES

- CEILING SURFACEMOUNT
- WALL SURFACEMOUNT
- PENDANT MOUNT
- RECESSED DOWNLIGHT
- RECESSED WALLWASH
- RECESSED FLUOR
- SURFACE FLUOR
- FLUOR. STRIP UON
- TRACK LIGHT
- DIRECTIONAL FLOOD
- EMERGENCY FIXTURE
- POLE LIGHT
- POLE LIGHT–DECORATIVE
- UPLIGHT–FLUSH IN GRADE
- BOLLARD
- TANDEM–WIRED LAMPS
- UNDERCABINET LIGHT
- WALL SURFACEMOUNT LINEAR TYPE
- PENDANT LINEAR FLUOR
- RECESSED WALLMOUNT
- WALLPACK
- EXIT LIGHT–WALL
- EXIT LIGHT–CEILING (ARROW INDICATES DIRECTION)
- A — LETTER ADJACENT INDICATES FIXTURE TYPE

POWER/COMM

- SINGLE RECEPT
- DUPLEX RECEPT
- DUPLEX–HALF SWITCHED
- DOUBLE DUPLEX
- SPECIAL CONFIGURATION
- FLOORMOUNT 208V, 1ø RECEPT
- DUPLEX–FLOOR OUTLET
- GFI — GROUND FAULT CIRCUIT INTERRUPT
- J — JUNCTION BOX
- J — SPECIAL SYSTEM JUNCTION BOX
- TELEPHONE OUTLET
- DATA OUTLET
- PHONE/DATA COMBO OUTLET
- TV — TELEVISION OUTLET
- SAFETY DISCONNECT
- J — DROP CORD RECEPT
- JC — ABOVE–CLGMOUNT J–BOX
- TV — TV OUTLET–FLOORMOUNT
- TELEPHONE FLOOR OUTLET
- DATA FLOOR OUTLET
- WIRELESS ACCESS POINT IN CEILING
- MOUNT DEVICE ABOVE COUNTER PER ARCHITECTURAL REQUIREMENTS

CONDUIT/WIRE

- NEW
- UNDERGROUND
- NEW POWER HOMERUN (3 HOTS & NEUT SHOWN)
- ISOLATED GROUND
- E — ISOLATED GROUND
- (E) POWER HOMERUUN
- WIRE LINE–CONTINUES
- CONDUIT STUB (W/MARKER)
- VERTICAL CONDUIT RUN
- CONDUIT SEAL
- FLEXIBLE CONNECTION
- LV — LOW VOLTAGE
- SURFACEMOUNT RACEWAY
- INDICATES LINE CONTINUES
- CORD W/PLUG

FIRE ALARM

- H — NORN–AUDIBLE DEVICE
- V — VISUAL–VISUAL DEVICE
- AV — AUDIBLE/VISUAL
- F — FLOW SWITCH
- T — TAMPER SWITCH
- P — MANUAL PULL STATION
- SD — SMOKE DETECTOR
- SDD — DUCT SMOKE DETECTOR
- H — HEAT DETECTOR
- B — BELL
- END OF LINE RESISTOR
- C — CHIME

MISCELLANEOUS

- MOTOR
- THERMOSTAT
- CIRCUIT BREAKER
- FUSIBLE SWITCH
- GROUND
- ø — PHASE
- CLOCK
- S — CLOCK/SPEAKER COMBINATION
- WALL MOUNTED CLOCK
- PUSHBUTTON
- FLUSHMOUNT PANEL
- SURFACEMOUNT PANEL
- FLUSHMOUNT PANEL
- SURFACEMOUNT PANEL
- DM — DAMPER MOTOR
- H — HUMIDISTAT
- M — MAGNETIC CONTACTOR
- COMBINATION STARTER

SWITCHES

- $ — SPST
- $2 — DPST
- $3 — 3–WAY
- $4 — 4–WAY
- $D — DIMMER
- TIMER SWITCH
- $T — W/THERMAL OVERLOAD
- $P — W/PILOT LIGHT
- $K — KEY OPERATED
- $$ — DUAL LEVEL SWITCHING
- (a) — SWITCHLEG DESIGNATION
- OS — OCCUPANCY SENSOR
- $OC — OCCUPANCY SENSOR SWITCH

ABBREVIATIONS

A	AMPERE
AB	AMP BREAKER
ABAND	ABANDONED
ABV	ABOVE
AC	ALTERNATING CURRENT
AC–#	AIR CONDITIONER
ADJ	ADJACENT
AF	AMP FUSE, AMP FRAME
AFF	ABOVE FINISH FLOOR
AFG	ABOVE FINISH GRADE
AIC	AMPERES INTERRUPTING CAPACITY
AI	ALUMINUM
AS	AMP SWITCH RATING
ATS	AUTOMATIC TIME SWITCH
ATS	AUTOMATIC TRANSFER SWITCH
AV	AUDIBLE/AUDIO VISUAL
AWG	AMERICAN WIRE GAGE
BFG	BELOW FINISH GRADE
BIL	BASIC IMPULSE LEVEL
BLDG	BUILDING
C	CONDUIT
C	CATV CONDUIT
CAB'T	CABINET
CATV	CABLE TELEVISION
CB	CIRCUIT BREAKER, CODE BLUE
CBC	CA. BUILDING CODE
CEC	CA. ELECTRICAL CODE
	CA. ENERGY COMMISSION
GF	COMPACT FLUORESCENT
CFC	CALIFORNIA FIRE CODE
CLG	CEILING
CL	CENTER LINE
CKT	CIRCUIT
CNT'R	CONTRACTOR
C.O.	CONDUIT ONLY (W/PULLROPE)
COND	CONDUIT, CONDUCTOR
CR	CRITICAL BRANCH
CSFM	CALIFORNIA SFM
CT	CURRENT TRANSFORMER
CU	COPPER
CU–#	CONDENSING UNIT
D	DEPTH
DC	DIRECT CURRENT
DF	DRINKING FOUNTAIN
DIA	DIAMETER
DISC	DISCONNECT
DIST	DISTRIBUTION
DPST	DOUBLE POLE SINGLE THROW
DW	DISHWASHER
EM	EMERGENCY
(E)	EXISTING
EA	EACH

EB	ELECTRONIC BALLAST
EC	ELECTRICAL CONTRACTOR
EC–#	EVAPORATIVE COOLER
EF–#	EXHAUST FAN
EL	EVENING LIGHT
ELEC	ELECTRICAL
EM	EMERG BATTERY BACKUP
EMB	EMERGENCY BALLAST
EMERG	EMERGENCY
EOL	END OF LINE
EQUIP'T	EQUIPMENT
ES	ENERGY SAVING
(EXN)	(E) IN (N) LOCATION
(EXR)	(E) TO BE (R)
EXT	EXTERIOR
F	FLUORESCENT
(F)	FUTURE
F–#	FURNACE
FA	FIRE ALARM
FACP	FIRE ALARM CONTROL PANEL
FAT	FIRE ALARM TERMINAL
FAU	FORCED AIR UNIT
FBO	FURNISHED BY OTHERS
FC–#	FAN COIL
FLA	FULL LOAD AMPS
FLR	FLOOR
FLUOR	FLUORESCENT
FS	FUSIBLE SWITCH
FVNR	FULL VOLTAGE NON–REVERSING
G	GROUNDING CONDUCTOR
GC	GENERAL CONTRACTOR
GD	GARBAGE DISPOSAL
GFCI	GROUND FAULT CIRCUIT INTERRUPTER
GFI	GROUND FAULT CIRCUIT INTERRUPTER
GND	GROUND
GRS	GALVANIZED RIGID STEEL
GWS	GANG WITH SWITCH
H	HEIGHT, HIGH
HACR	HEATING, AC & REFRIG
HH	HALF HOT
HID	HIGH INTENSITY DISCHARGE
HO	HIGH OUTPUT
HOA	HAND–OFF–AUTO
HP	HORSEPOWER
HPF	HIGH POWER FACTOR
HPS	HIGH PRESSURE SODIUM
IC	INTERCOM
ID	IDENTIFICATION
IF	INSIDE FROST
IG	ISOLATED GROUND
J–BOX	JUNCTION BOX
K	QUANTITY 1000

kVA	KILOVOLTAMPS
kW	KILOWATT
LC	LIGHTING CONTACTOR
LPS	LOW PRESSURE SODIUM
LRA	LOCKED ROTOR AMPS
LS	LIFE SAFETY BRANCH
LT	LIGHT
LTG	LIGHTING
LV	LOW VOLTAGE
MC	MECHANICAL CONTRACTOR
MCA	MINIMUM CKT AMPS
MCB	MAIN CIRCUIT BREAKER
MCTB	MAIN CATV TERMINAL BOARD
MCTC	MAIN CATV TERMINAL CABINET
MECH	MECHANICAL
MFR	MANUFACTURER
MFS	MAIN FUSIBLE SWITCH
MH	METAL HALIDE
MLO	MAIN LUGS ONLY
MOCP	MAXIMUM OCP
MSB	MAIN SWITCHBOARD
MT	MOUNT
MT HT	MOUNTING HEIGHT
MTS	MANUAL TRANSFER SWITCH
MTTB	MAIN TELEPHONE TERMINAL BOARD
MTTC	MAIN TELEPHONE TERMINAL CABINET
MW	MICROWAVE
N	NEUTRAL (GROUNDED CONDUCTOR)
(N)	NEW
N3R	NEMA 3R
NC	NORMALLY CLOSED
NEC	NATIONAL ELECTRICAL CODE
NEMA	NAT'L ELEC MANUFACTURER'S ASSOC
NIC	NOT IN CONTRACT
NL	NIGHT LIGHT
NO	NORMALLY OPEN
NPF	NORMAL POWER FACTOR
NTS	NOT TO SCALE
OC	ON CENTER
OCP	OVERCURRENT PROTECTION
OD	OUTSIDE DIAMETER
OH	OVERHEAD
OSA	OFFICE of the STATE ARCHITECT
OSHPD	OFFICE of STATEWIDE HEALTH PLANNING & DEVELOPMENT
OVLD	OVERLOAD
P	POLE
PA	PUBLIC ADDRESS
PB	PULLBOX
PC	PULL CHAIN
PC	PHOTOCELL
ph	PHASE
PNL	PANEL

POC	POINT OF CONNECTION
–PP–	POWER PRIMARY
–PS–	POWER SECONDARY
(R)	RELOCATE(D)
RECEPT	RECEPTACLE
REF	REFRIGERATOR
REQ'D	REQUIRED
RLA	RATED LOAD AMPS
RM	ROOM
RMC	RIGID METAL CONDUIT
RMV	REMOVE
RPLC	REPLACE
RS	RAPID START
SC	SIGNAL CABINET
SCC	SHORT CKT CURRENT
SFM	STATE FIRE MARSHAL
SHT	SHEET
SL	SLIMLINE, SWITCH LEG
SPEC	SPECIFICATION
SPST	SINGLE POLE SINGLE THROW
SQ	SQUARE
STR'G	STORAGE
SURF	SURFACE
SVC	SERVICE
SW	SWITCH
T	TRANSFORMER, TERMINAL
–T–	TELEPHONE CONDUIT
TBR	TO BE REMOVED
TC	TIME CLOCK
TEL	TELEPHONE
TELCO	TELEPHONE COMPANY
TS	TIME SWITCH
TSO	TIME SWITCH OVERRIDE
TSP	TWISTED SHIELDED PAIR
TTB	TELEPHONE TERMINAL BOARD
TTC	TELEPHONE TERMINAL CABINET
TX	TRANSFORMER
TYP	TYPICAL
TYP SIM	TYPICAL SIMILAR
UC	UNDERCABINET, UNDERCOUNTER
UG	UNDERGROUND
UGPS	UNDERGROUND PULL SECTION
UL	UNDERWRITERS LABORATORIES
UON	UNLESS OTHERWISE NOTED
USA	UG SVC ALERT 800–642–24444
V	VOLT
VA	VOLT AMPERES
VAC	VOLT ALTERNATING CURRENT
VHO	VERY HIGH OUTPUT

GENERAL LIGHTING PLAN NOTES

– DUAL LEVEL SWITCHING: IN ROOMS 100 SQ. FT. OR LARGER, OR WHERE INDICATED ON PLANS, CONTROL INBOARD LAMPS BY ONE SWITCH AND OUTBOARD LAMPS BY OTHER SWITCH

– NIGHT LIGHT (NL) DESIGNATED LUMINARIES IN INTERIOR LOCATIONS SHALL HAVE ONE BALLAST CONTINUOUSLY ENERGIZED. LUMINARIES IN EXTERIOR LOCATIONS SHALL BE AUTOMATICALLY CONTROLLED TO BE ON FROM DUSK TO DAWN

– LIGHTING FIXTURE LOCATIONS SHOWN ARE SCHEMATIC. REFER TO ARCHITECTURAL PLANS (REFLECTED CEILING, ELEVATIONS, ETC.) FOR EXACT LOCATIONS AND MOUNTING HEIGHTS PRIOR TO ROUGH–IN

– REFER TO ARCHITECT'S REFLECTED CEILING PLAN(S) FOR CEILING HEIGHTS, TYPES, FINISHES, ETC. IN EACH AREA. VERIFY FLANGE TYPES, TRIM KITS, STEM LENGTHS, ETC. FOR ALL FIXTURES PRIOR TO SUBMITTALS.

– CONFIRM LOCATION OF ALL DOORS SWINGS WITH ARCHITECTURAL PLANS PRIOR TO ROUGH–IN OF SWITCHES.

– PROVIDE UNSWITCHED HOT LEG OF ROOM LIGHTING BRANCH CIRCUIT TO EACH BATTERY POWERED EMERGENCY LIGHT AND EXIT SIGN FOR CONTINUOUS CHARGING

GENERAL POWER PLAN NOTES

– FUSING: ALL FUSIBLE SAFETY DISCONNECT SWITCHES SHALL BE PROVIDED WITH DUAL–ELEMENT TIME DELAY TYPE FUSES SIZED AND RATED PER EQUIPMENT MANUFACTURERS' RECOMMENDATIONS. VERIFY WITH EQUIPMENT NAMEPLATE BEFORE INSTALLATION.

– INSTALL SEPARATE NEUTRALS FOR EACH BRANCH CIRCUIT SERVING ISOLATED GROUND RECEPTACLES.

– MOTOR OVERLOAD PROTECTION: WHERE REQUIRED BY NEC ARTICLE 430 PART C AND NOT SHOW ON PLAN OR PROVIDED INTEGRAL WITH EQUIPMENT, PROVIDE AND INSTALL THERMAL OVERLOAD PROTECTION FOR ALL MOTORS.

– SPARE CONDUIT FOR RECESSED PANELS: PROVIDE (1) 3/4" SPARE CONDUIT STUB UP TO ACCESSIBLE ABOVE CEILING SPACE AND/OR ACCESSIBLE SPACE BELOW FOR EVERY (3) SPARE BREAKER SPACES AS INDICATED ON PANEL SCHEDULES.

– DEVICE LOCATIONS SHOWN ARE SCHEMATIC AND APPROXIMATE. EXACT LOCATIONS SHALL BE FIELD VERIFIED DURING ROUGH–IN WITH ARCHITECTURAL ELEVATIONS, CASEWORK SHOP DRAWINGS, FURNITURE, ETC. AND SHALL BE COORDINATED WITH OTHER TRADES TO AVOID CONFLICT WITH OTHER EQUIPMENT.

– ELECTRICAL AND COMMUNICATIONS OUTLETS SHOWN IN THE SAME LOCATION, SHALL BE MOUNTED ON OPPOSITE SIDES OF THE SAME STUD. COORDINATE BETWEEN ELECTRICAL AND COMMUNICATIONS PLANS.

GENERAL COMMUNICATION PLAN NOTES

– SIGNAL AND COMMUNICATIONS SYSTEMS RACEWAYS AND BOXES: PROVIDE AND INSTALL 4" SQUARE RECESSED JUNCTION BOX WITH 1–GANG RING AND (1) 3/4" CONDUIT STUB TO ACCESSIBLE CEILING SPACE AT EACH WALL TELEPHONE (VOICE), TELEVISION AND DATA OUTLET LOCATION SHOWN ON THE PLANS UNLESS OTHERWISE NOTED. FOR EACH COMBINATION VOICE/DATA OUTLET, PROVIDE AND INSTALL (2) 3/4" CONDUIT STUBS TO ACCESSIBLE CEILING SPACE.

BEFORE CONSTRUCTION, COORDINATE AND VERIFY ALL DATA AND TELEPHONE LOCATIONS WITH OWNER OR ARCHITECT

– TELEPHONE WIRING: EACH TELEPHONE OUTLET LOCATION SHOWN ON THE PLANS SHALL HAVE A 4 PAIR, 24 GAUGE CONTINUOUS CABLE, CATEGORY 6 (BERK–TEK LANMARK SERIES OR APPROVED EQUAL), HOMERUN TO THE TELEPHONE TERMINAL BOARD "TTB" TERMINATE AT OUTLET LOCATION WITH OWNER APPROVED JACK, VERIFY LOCATIONS WITH OWNER OR ARCHITECT PRIOR TO CONSTRUCTION.

– TELEVISION PREWIRE: EACH TELEVISION OUTLET SHOWN ON THE PLANS SHALL HAVE AN RG6U (WITH QUAD SHIELD) COAXIAL CABLE HOMERUN PREWIRED TO THE CATV TERMINAL BOARD LABEL AND LEAVE ADEQUATE SLACK FOR UTILITY CONNECTION.

– VOICE/DATA WIRING: EACH VOICE/DATA OUTLET LOCATION SHOWN ON THE PLANS SHALL HAVE (4) 4 PAIR, 24 GAUGE, CATEGORY 6, UTP CABLES (BERK–TEK LANMARK SERIES OR APPROVED EQUAL) HOMERUN TO THE TELEPHONE TERMINAL BOARD. TERMINATE AT OUTLET LOCATION WITH OWNER APPROVED JACK. VERIFY SYSTEM REQUIREMENTS WITH OWNER OR ARCHITECT PRIOR TO CONSTRUCTION.

– DEVICE LOCATIONS SHOWN ARE SCHEMATIC AND APPROXIMATE. EXACT LOCATIONS SHALL BE FIELD VERIFIED DURING ROUGH–IN WITH ARCHITECTURAL ELEVATIONS, CASEWORK SHOP DRAWINGS, FURNITURE, ETC. AND SHALL BE COORDINATED WITH OTHER TRADES TO AVOID CONFLICT WITH OTHER EQUIPMENT.

– ELECTRICAL AND COMMUNICATIONS OUTLETS SHOWN IN THE SAME LOCATION, SHALL BE MOUNTED ON OPPOSITE SIDES OF THE SAME STUD. COORDINATE BETWEEN ELECTRICAL AND COMMUNICATIONS PLANS.

ROOF PLAN NOTES

– PROVIDE SEALTITE POWER & CONTROL CONNECTIONS TO ALL AC UNITS.

– ALL EQUIPMENT SHOWN ABOVE ROOF IS NEMA 3R.

– VERIFY EXACT EQUIPMENT LOCATIONS AND POINTS OF CONNECTION WITH MECHANICAL CONTRACTOR PRIOR TO ROUGH–IN

– CONDUIT SHOWN IS ROUTED IN CEILING SPACE BELOW ROOF DECK

– NO ROOF MOUNT CONDUIT IS ALLOWED UNLESS OTHERWISE NOTED

– FUSE DISCONNECT SWITCHES PER EQUIPMENT NAMEPLATE RATING

– ALL ROOF PENETRATIONS SHALL BE MADE WITH ROOF JACKS, SEAL ALL PENETRATIONS WITH MASTIC

GENERAL NOTES

1. CODE COMPLIANCE ALL WORK SHALL CONFORM TO AND BE PERFORMED IN ACCORDANCE WITH CODES, STANDARDS AND ORDINANCES AS SET FORTH BY THE AUTHORITIES HAVING JURISDICTION AND THEIR LATEST ADOPTED EDITIONS (IN EFFECT AT TIME OF BUILDING PERMIT APPLICATION) OF THE FOLLOWING PUBLICATIONS:

   A. CALIFORNIA CODE OF REGULATIONS TITLE 24; INCLUDES CURRENT NATIONAL ELECTRICAL CODE, UNIFORM FIRE CODE, UNIFORM BUILDING CODE, ETC. WITH CALIFORNIA AND OTHER LOCAL AMENDMENTS AS APPLICABLE.

   B. AMERICANS WITH DISABILITIES ACT (ADA)

2. SAFETY: THE ELECTRICAL CONTRACTOR IS RESPONSIBLE TO MAINTAIN ALL EQUIPMENT IN A SAFE AND RESPONSIBLE MANNER. KEEP DEAD FRONT EQUIPMENT IN PLACE WHILE EQUIPMENT IS ENERGIZED. CONDUCT ALL CONSTRUCTION OPERATIONS IN A SAFE MANNER FOR EMPLOYEES AS WELL AS OTHER WORKPERSONS OR ANYONE VISITING THE JOB SITE. PROVIDE BARRIERS, FLAGS, TAPE, ETC. AS REQUIRED FOR SAFETY. THE CONTRACTOR SHALL HOLD ALL PARTIES HARMLESS OF NEGLIGENT SAFETY PRACTICES, WHICH MAY CAUSE INJURY TO OTHERS ON OR NEAR THE JOB SITE.

3. FIRE RATED ASSEMBLIES SHALL MAINTAIN RATINGS AS SPECIFIED IN THE CALIFORNIA BUILDING CODE CHAPTER 7. CONTRACTOR SHALL PROVIDE AND INSTALL PHYSICAL ENCLOSURE AROUND FIXTURES, PANELS, ETC. AS REQUIRED. ALL ASSEMBLIES TO BE PENETRATED SHALL BE INSTALLED WITH APPLICABLE THROUGH–PENETRATION FIRESTOP SYSTEM AS DETERMINED BY UL CLASSIFICATION. BEFORE CONSTRUCTION, VERIFY AND COMPLY WITH REQUIREMENTS OF LOCAL AUTHORITY HAVING JURISDICTION.

4. MOUNTING HEIGHTS IN INCHES ABOVE FINISH FLOOR SHALL BE AS FOLLOWS UNLESS OTHERWISE NOTED:

   FROM BOTTOM OF PLATE +15" AFF: RECEPTACLES, TELEPHONE, TV & DATA OUTLETS
   TOP OF SWITCH PLATE +48" AFF: LIGHT SWITCHES
   +48" AFF: FIRE ALARM MANUAL PULL STATIONS, T–STATS
   THE LOWER OF +80" AFF OR 6" BELOW CEILING: FIRE ALARM VISUALS

   BEFORE ROUGH–IN, VERIFY ALL MOUNTING HEIGHTS AND EXACT LOCATIONS FOR ALL EQUIPMENT ELECTRICAL CONNECTIONS, STUB–UPS, RECEPTACLES, OUTLETS, ETC. WITH ARCHITECT OR OWNER. PLACE DEVICES LOCATED ABOVE COUNTERS, SHELVING, ETC. AND BATHROOMS SO AS NOT TO CONFLICT WITH EDGES OF WAINSCOTING, COUNTER SPLASH, SHELVING, ETC. ARCHITECTURAL SHEETS SHALL GOVERN.

5. LABEL PANELS, CABINETS, BACKBOARDS, MAIN DEVICES, SAFETY SWITCHES, CONTACTORS AND OTHER SPECIFICALLY DESIGNATED EQUIPMENT SHOWN ON PLANS. USE ENGRAVED LAMINATED PLASTIC NAMEPLATES ATTACHED BY SCREWS OR RIVETS. FOR FEEDERS, NEATLY AND INDELIBLY LABEL CONDUIT DESTINATIONS ON BOTH VISIBLE ENDS OF CONDUIT RUNS WHERE CONDUITS TERMINATE AT DESIGNATED ENCLOSURES, STRUCTURES OR EQUIPMENT (INCLUDING PULL AND SPLICE BOXES)

6. EQUIPMENT ANCHORAGE: BRACE OR ANCHOR ALL ELECTRICAL EQUIPMENT TO RESIST A HORIZONTAL FORCE ACTING IN ANY DIRECTION. USE THE FOLLOWING CRITERIA FOR DETERMINING:

   A. FIXED EQUIPMENT ON GRADE 30% OF OPERATING WEIGHT.
   B. FIXED EQUIPMENT ON STRUCTURE 45% OF OPERATING WEIGHT.
   C. EMERGENCY POWER EQUIPMENT ON GRADE 40% OF OPERATING WEIGHT.
   D. EMERGENCY POWER EQUIPMENT ON STRUCTURE 60% OF OPERATING WEIGHT.

   EXCEPTIONS: FOR FLEXIBLY MOUNTED EQUIPMENT USE 4X THE ABOVE VALUES; FOR SIMULTANEOUS VERTICAL FORCE, USE 3X HORIZONTAL FORCE. SEE STRUCTURAL PLANS FOR ANCHORAGE DETAILS AND WHERE ANCHORAGE DETAILS ARE NOT SHOWN ON THE DRAWINGS, THE FIELD INSTA INSTALLATION SHALL BE SUBJECT TO THE APPROVAL OF THE STRUCTURAL ENGINEER AND THE FIELD REPRESENTATIVE OF THE AUTHORITY HAVING JURISDICTION. SHOULD SAID APPROVAL BE WITHHELD, ELECTRICAL CONTRACTOR SHALL, AT NO EXTRA COST TO THE OWNER, MODIFY AND JUSTIFY INSTALLATION AS REQUIRED TO GAIN APPROVAL.

MECHANICAL SYSTEMS

1. MECHANICAL UNIT CONDUITS: TO PREVENT DAMAGE DUE TO VIBRATION, BOTH POWER AND CONTROL WIRING CONDUITS FEEDING EXTERIOR MECHANICAL UNITS SHALL BE PROVIDED AND INSTALLED BY ELECTRICAL CONTRACTOR WITH LIQUID TIGHT FLEXIBLE TYPE AT FINAL CONNECTION TO UNIT AND BETWEEN ROOF JACK AND DISCONNECT SWITCH WHERE DISCONNECT IS MOUNTED ON UNIT.

2. NOT USED

3. T–STAT J–BOXES: PROVIDE AND INSTALL 4" SQUARE JUNCTION BOX WITH 1–GANG RING AND 1/2" CONDUIT TO ACCESSIBLE CEILING SPACE ABOVE AT EACH THERMOSTAT LOCATION

4. EXHAUST FANS SHALL BE PROVIDED & INSTALLED BY MECHANICAL CONTRACTOR WITH WIRING CONNECTIONS MADE BY ELECTRICAL CONTRACTOR

5. MECHANICAL EQUIPMENT CONTROLS: MECHANICAL CONTRACTOR SHALL BE RESPONSIBLE FOR ALL LOW VOLTAGE WIRE AND CONNECTIONS (BELOW 120 VOLT) TO AND FROM ALL MECHANICAL CONTROL DEVICES. ALL LOW VOLTAGE CONTROL WIRE SHALL BE IN CONDUIT, UNLESS OTHERWISE NOTED.

6. PULL ROPES: ANY RACEWAY WITHOUT CABLE OR WIRE SHALL BE INSTALLED WITH MINIMUM 200 POUND TEST PULL LINE AND LARGER IF REQUIRED BY SERVING UTILITY COMPANY. ANY NEW OR EXISTING COMMUNICATION OR SIGNAL RACEWAY ROUTED BETWEEN BUILDINGS, SIGNAL CABINETS, AND/OR SIGNAL CLOSETS WITH FUTURE CAPACITY SHALL BE INSTALLED WITH MINIMUM 200 POUND TEST PULL LINE AS WELL AS THE CALLED FOR CABLE

FIRE ALARM SYSTEM

1. DUCT SMOKE DETECTORS SHALL BE PROVIDED BY ELECTRICAL CONTRACTOR AND INSTALLED BY MECHANICAL CONTRACTOR. DETECTOR POWER AND SUPERVISORY WIRING AND CONNECTIONS SHALL BE MADE BY ELECTRICAL CONTRACTOR. MECHANICAL UNIT CONTROL (SHUTDOWN UPON DETECTOR ALARM) WIRING AND CONNECTIONS SHALL BE MADE BY MECHANICAL CONTRACTOR

EXISTING BUILDING

1. ANY DEMOLITION WORK SHOWN WAS PREPARED FOR THE CONVENIENCE OF THE CONTRACTOR. THE ENGINEER DOES NOT REPRESENT THAT ALL ITEMS WHICH MAY REQUIRE DEMOLITION HAVE BEEN SHOWN. IT SHALL BE THE RESPONSIBILITY OF THE CONTRACTOR TO CAREFULLY EXAMINE THE SITE AND THE CONTRACT DOCUMENTS AND TO PERFORM ALL DEMOLITION AND RECONSTRUCTION WHICH MAY BE REQUIRED FOR THE PROPER EXECUTION AND COMPLETION OF THE WORK

2. EXISTING CONDITIONS: INFORMATION SHOWN FOR EXISTING CONDITIONS WAS PRIMARILY GAINED FROM "AS BUILT" DRAWINGS AND/OR LIMITED FIELD INVESTIGATION. BEFORE BID, VISIT SITE TO VERIFY EXISTING CONDITIONS AND MAKE ALLOWANCE FOR VARIATIONS FROM THAT SHOWN

3. EXISTING CONDUCTORS: INTERCEPT, EXTEND, REROUTE, REPULL CONDUCTORS, SPLICE AND OTHERWISE MODIFY EXISTING CONDUCTORS OF ALL SYSTEMS AS REQUIRED TO MAINTAIN AND/OR ESTABLISH PROPER FUNCTION AND SATISFY DESIGN INTENT. REMOVE ABONDONED CONDUCTORS

4. EXISTING COMMUNICATIONS, DATA AND CATV AND OTHER LOW VOLTAGE TYPE SYSTEM OUTLET LOCATIONS SHOWN ON THE PLAN TO BE RELOCATED SHALL BE PERFORMED BY THE ELECTRICAL CONTRACTOR. MODIFY EXISTING SYSTEM AS REQUIRED FOR FULL FUNCTION (SAME AS EXISTING) IN NEW LOCATION

5. WHERE EXISTING BUILDING CONSTRUCTION, MECHANICAL UNITS AND OTHER EQUIPMENT IS SHOWN TO BE REMOVED, DISCONNECT AND REMOVE ALL ASSOCIATED ELECTRICAL INSTALLATION

6. CLOSELY COORDINATE OUTAGE AND FACILITY DISRUPTION TIME WITH ARCHITECT AND OWNER. MINIMUM 72–HOUR NOTICE IS REQUIRED BEFORE ANY CIRCUIT SHUTDOWN OR DISRUPTION OF FACILITY PERSONNEL FUNCTIONING

Klassen corporation
Architecture Construction
2021 Westwind Drive
Bakersfield, CA 93301
(661) 324-3000
(661) 324-3900 Fax
www.klassencorp.com

The above drawings and specifications and ideas, designs and arrangements represented thereby are and shall remain the property of the architect: and no part thereof shall be copied, disclosed to others or used in connection with any work or project other than the specific project for which they have been prepared and developed without the written consent of the architect. Visual contact with these drawings or specifications shall constitute conclusive evidence of acceptance of these restrictions.
Written dimensions on these drawings shall have precedence over scaled dimension: contractors shall verify and be responsible for, all dimensions and conditions on the job and this office must be notified of any variations from the dimensions and conditions shown by these drawings. Shop details must be submitted to this office for approval before proceeding with fabrication.

TENANT IMPROVEMENTS
SAN JOAQUIN VALLEY PULMONARY
5801 TRUXTUN AVE, BAKERSFIELD CA 933309

MARK	ISSUED FOR	DATE
	OWNER SD SUBMITTAL	07/01/19
	OWNER DD SUBMITTAL	07/31/19
	OWNER CD SUBMITTAL	08/15/19

Project No. : C19-148

ELECTRICAL GENERAL NOTES

E1.0

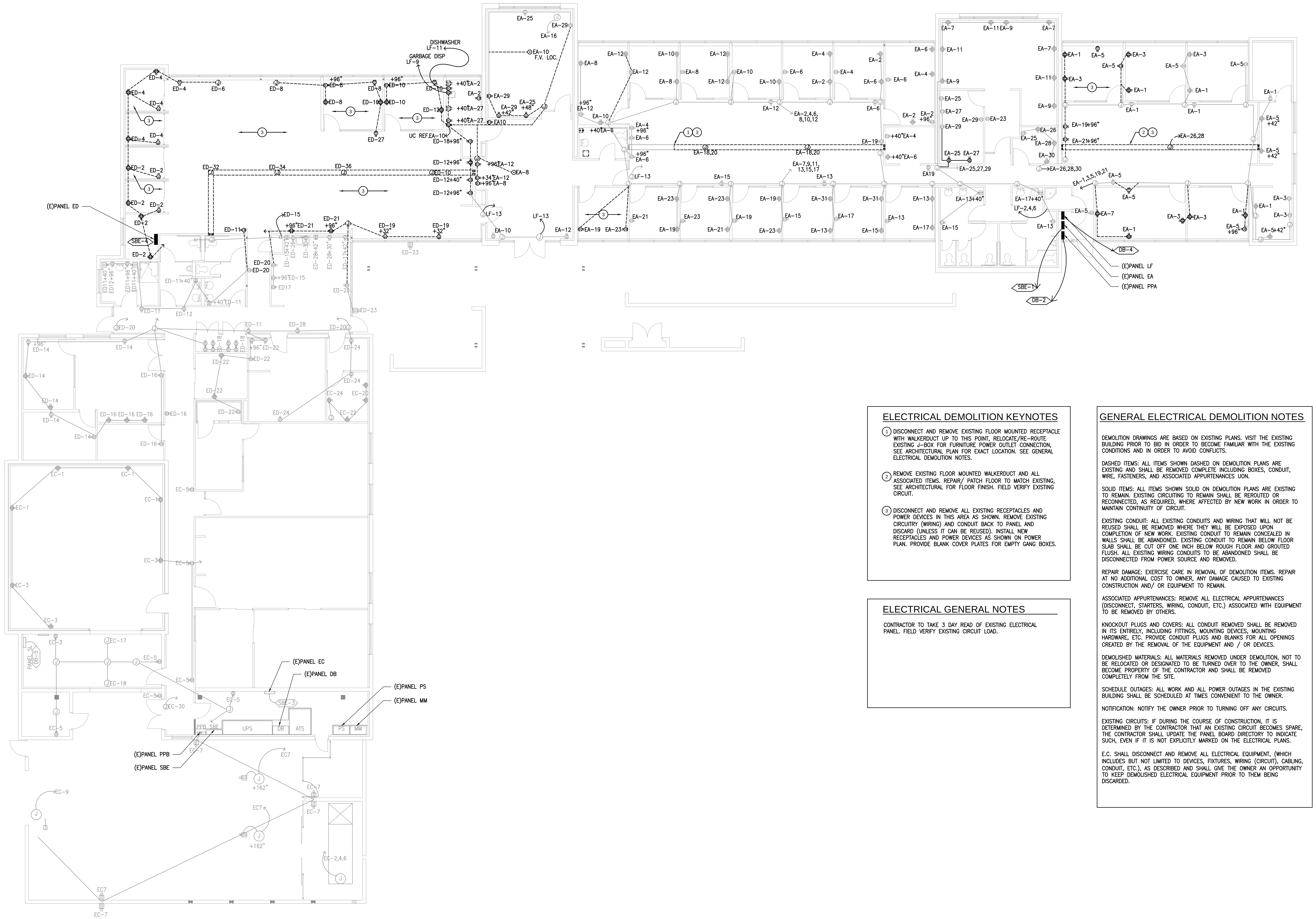

POWER DEMOLITION FLOOR PLAN

SCALE: 1/8" = 1'-0"

ELECTRICAL DEMOLITION KEYNOTES

1. DISCONNECT AND REMOVE EXISTING FLOOR MOUNTED RECEPTACLE WITH WALKERDUCT UP TO THIS POINT, RELOCATE/RE-ROUTE EXISTING J-BOX FOR FURNITURE POWER OUTLET CONNECTION, SEE ARCHITECTURAL PLAN FOR EXACT LOCATION. SEE GENERAL ELECTRICAL DEMOLITION NOTES.
2. REMOVE EXISTING FLOOR MOUNTED WALKERDUCT AND ALL ASSOCIATED ITEMS. REPAIR/ PATCH FLOOR TO MATCH EXISTING, SEE ARCHITECTURAL FOR FLOOR FINISH. FIELD VERIFY EXISTING CIRCUIT.
3. DISCONNECT AND REMOVE ALL EXISTING RECEPTACLES AND POWER DEVICES IN THIS AREA AS SHOWN. REMOVE EXISTING CIRCUITRY (WIRING) AND CONDUIT BACK TO PANEL AND DISCARD (UNLESS IT CAN BE REUSED). INSTALL NEW RECEPTACLES AND POWER DEVICES AS SHOWN ON POWER PLAN. PROVIDE BLANK COVER PLATES FOR EMPTY GANG BOXES.

ELECTRICAL GENERAL NOTES

CONTRACTOR TO TAKE 3 DAY READ OF EXISTING ELECTRICAL PANEL. FIELD VERIFY EXISTING CIRCUIT LOAD.

GENERAL ELECTRICAL DEMOLITION NOTES

DEMOLITION DRAWINGS ARE BASED ON EXISTING PLANS. VISIT THE EXISTING BUILDING PRIOR TO BID IN ORDER TO BECOME FAMILIAR WITH THE EXISTING CONDITIONS AND IN ORDER TO AVOID CONFLICTS.

DASHED ITEMS: ALL ITEMS SHOWN DASHED ON DEMOLITION PLANS ARE EXISTING AND SHALL BE REMOVED COMPLETE INCLUDING BOXES, CONDUIT, WIRE, FASTENERS, AND ASSOCIATED APPURTENANCES UON.

SOLID ITEMS: ALL ITEMS SHOWN SOLID ON DEMOLITION PLANS ARE EXISTING TO REMAIN. EXISTING CIRCUITING TO REMAIN SHALL BE REROUTED OR RECONNECTED, AS REQUIRED, WHERE AFFECTED BY NEW WORK IN ORDER TO MAINTAIN CONTINUITY OF CIRCUIT.

EXISTING CONDUIT: ALL EXISTING CONDUITS AND WIRING THAT WILL NOT BE REUSED SHALL BE REMOVED WHERE THEY WILL BE EXPOSED UPON COMPLETION OF NEW WORK. EXISTING CONDUIT TO REMAIN CONCEALED IN WALLS SHALL BE ABANDONED. EXISTING CONDUIT TO REMAIN BELOW FLOOR SLAB SHALL BE CUT OFF ONE INCH BELOW ROUGH FLOOR AND GROUTED FLUSH. ALL EXISTING WIRING CONDUITS TO BE ABANDONED SHALL BE DISCONNECTED FROM POWER SOURCE AND REMOVED.

REPAIR DAMAGE: EXERCISE CARE IN REMOVAL OF DEMOLITION ITEMS. REPAIR AT NO ADDITIONAL COST TO OWNER, ANY DAMAGE CAUSED TO EXISTING CONSTRUCTION AND/ OR EQUIPMENT TO REMAIN.

ASSOCIATED APPURTENANCES: REMOVE ALL ELECTRICAL APPURTENANCES (DISCONNECT, STARTERS, WIRING, CONDUIT, ETC.) ASSOCIATED WITH EQUIPMENT TO BE REMOVED BY OTHERS.

KNOCKOUT PLUGS AND COVERS: ALL CONDUIT REMOVED SHALL BE REMOVED IN ITS ENTIRELY, INCLUDING FITTINGS, MOUNTING DEVICES, MOUNTING HARDWARE, ETC. PROVIDE CONDUIT PLUGS AND BLANKS FOR ALL OPENINGS CREATED BY THE REMOVAL OF THE EQUIPMENT AND / OR DEVICES.

DEMOLISHED MATERIALS: ALL MATERIALS REMOVED UNDER DEMOLITION, NOT TO BE RELOCATED OR DESIGNATED TO BE TURNED OVER TO THE OWNER, SHALL BECOME PROPERTY OF THE CONTRACTOR AND SHALL BE REMOVED COMPLETELY FROM THE SITE.

SCHEDULE OUTAGES: ALL WORK AND ALL POWER OUTAGES IN THE EXISTING BUILDING SHALL BE SCHEDULED AT TIMES CONVENIENT TO THE OWNER.

NOTIFICATION: NOTIFY THE OWNER PRIOR TO TURNING OFF ANY CIRCUITS.

EXISTING CIRCUITS: IF DURING THE COURSE OF CONSTRUCTION, IT IS DETERMINED BY THE CONTRACTOR THAT AN EXISTING CIRCUIT BECOMES SPARE, THE CONTRACTOR SHALL UPDATE THE PANEL BOARD DIRECTORY TO INDICATE SUCH, EVEN IF IT IS NOT EXPLICITLY MARKED ON THE ELECTRICAL PLANS.

E.C. SHALL DISCONNECT AND REMOVE ALL ELECTRICAL EQUIPMENT, (WHICH INCLUDES BUT NOT LIMITED TO DEVICES, FIXTURES, WIRING (CIRCUIT), CABLING, CONDUIT, ETC.), AS DESCRIBED AND SHALL GIVE THE OWNER AN OPPORTUNITY TO KEEP DEMOLISHED ELECTRICAL EQUIPMENT PRIOR TO THEM BEING DISCARDED.

Klassen corporation
Architecture Construction
2021 Westwind Drive
Bakersfield, CA 93301
(661) 324-3000
(661) 324-3900 Fax
www.klassencorp.com

The above drawings and specifications and ideas, designs and arrangements represented thereby are and shall remain the property of the architect: and no part thereof shall be copied, disclosed to others or used in connection with any work or project other than the specific project for which they have been prepared and developed without the written consent of the architect. Visual contact with these drawings or specifications shall constitute conclusive evidence of acceptance of these restrictions.

Written dimensions on these drawings shall have precedence over scaled dimension: contractors shall verify and be responsible for, all dimensions and conditions on the job and this office must be notified of any variations from the dimensions and conditions shown by these drawings. Shop details must be submitted to this office for approval before proceeding with fabrication.

TENANT IMPROVEMENTS
SAN JOAQUIN VALLEY PULMONARY
5801 TRUXTUN AVE, BAKERSFIELD CA 933309

DATE	ISSUED FOR	MARK
07/03/19	OWNER SD SUBMITTAL	
07/31/19	OWNER DD SUBMITTAL	
08/15/19	OWNER CD SUBMITTAL	

Project No.: C19-148

POWER DEMOLITION FLOOR PLAN

E2.0

LIGHTING DEMOLITION FLOOR PLAN

SCALE: 1/8" = 1'-0"

ELECTRICAL DEMOLITION KEYNOTES

(1) DISCONNECT AND REMOVE ALL EXISTING LIGHTS AND LIGHTING CONTROLS IN THIS AREA AS SHOWN. REMOVE EXISTING CIRCUITRY (WIRING) AND CONDUIT BACK TO PANEL AND DISCARD (UNLESS IT CAN BE REUSED). INSTALL NEW LIGHTS AND LIGHTING CONTROL AS SHOWN ON NEW ELECTRICAL LIGHTING PLAN. PROVIDE BLANK COVER PLATES FOR EMPTY GANG BOXES.

GENERAL ELECTRICAL DEMOLITION NOTES

DEMOLITION DRAWINGS ARE BASED ON EXISTING PLANS. VISIT THE EXISTING BUILDING PRIOR TO BID IN ORDER TO BECOME FAMILIAR WITH THE EXISTING CONDITIONS AND IN ORDER TO AVOID CONFLICTS.

DASHED ITEMS: ALL ITEMS SHOWN DASHED ON DEMOLITION PLANS ARE EXISTING AND SHALL BE REMOVED COMPLETE INCLUDING BOXES, CONDUIT, WIRE, FASTENERS, AND ASSOCIATED APPURTENANCES UON.

SOLID ITEMS: ALL ITEMS SHOWN SOLID ON DEMOLITION PLANS ARE EXISTING TO REMAIN. EXISTING CIRCUITING TO REMAIN SHALL BE REROUTED OR RECONNECTED, AS REQUIRED, WHERE AFFECTED BY NEW WORK IN ORDER TO MAINTAIN CONTINUITY OF CIRCUIT.

EXISTING CONDUIT: ALL EXISTING CONDUITS AND WIRING THAT WILL NOT BE REUSED SHALL BE REMOVED WHERE THEY WILL BE EXPOSED UPON COMPLETION OF NEW WORK. EXISTING CONDUIT TO REMAIN CONCEALED IN WALLS SHALL BE ABANDONED. EXISTING CONDUIT TO REMAIN BELOW FLOOR SLAB SHALL BE CUT OFF ONE INCH BELOW ROUGH FLOOR AND GROUTED FLUSH. ALL EXISTING WIRING CONDUITS TO BE ABANDONED SHALL BE DISCONNECTED FROM POWER SOURCE AND REMOVED.

REPAIR DAMAGE: EXERCISE CARE IN REMOVAL OF DEMOLITION ITEMS. REPAIR AT NO ADDITIONAL COST TO OWNER, ANY DAMAGE CAUSED TO EXISTING CONSTRUCTION AND/ OR EQUIPMENT TO REMAIN.

ASSOCIATED APPURTENANCES: REMOVE ALL ELECTRICAL APPURTENANCES (DISCONNECT, STARTERS, WIRING, CONDUIT, ETC.) ASSOCIATED WITH EQUIPMENT TO BE REMOVED BY OTHERS.

KNOCKOUT PLUGS AND COVERS: ALL CONDUIT REMOVED SHALL BE REMOVED IN ITS ENTIRELY, INCLUDING FITTINGS, MOUNTING DEVICES, MOUNTING HARDWARE, ETC. PROVIDE CONDUIT PLUGS AND BLANKS FOR ALL OPENINGS CREATED BY THE REMOVAL OF THE EQUIPMENT AND / OR DEVICES.

DEMOLISHED MATERIALS: ALL MATERIALS REMOVED UNDER DEMOLITION, NOT TO BE RELOCATED OR DESIGNATED TO BE TURNED OVER TO THE OWNER, SHALL BECOME PROPERTY OF THE CONTRACTOR AND SHALL BE REMOVED COMPLETELY FROM THE SITE.

SCHEDULE OUTAGES: ALL WORK AND ALL POWER OUTAGES IN THE EXISTING BUILDING SHALL BE SCHEDULED AT TIMES CONVENIENT TO THE OWNER.

NOTIFICATION: NOTIFY THE OWNER PRIOR TO TURNING OFF ANY CIRCUITS.

EXISTING CIRCUITS: IF DURING THE COURSE OF CONSTRUCTION, IT IS DETERMINED BY THE CONTRACTOR THAT AN EXISTING CIRCUIT BECOMES SPARE, THE CONTRACTOR SHALL UPDATE THE PANEL BOARD DIRECTORY TO INDICATE SUCH, EVEN IF IT IS NOT EXPLICITLY MARKED ON THE ELECTRICAL PLANS.

LIGHTS: ELECTRICAL CONTRACTOR (E.C.) SHALL REMOVE ALL LIGHT FIXTURES AS INDICATED ON DRAWINGS. IF ANY LIGHT FIXTURE BALLASTS ARE FOUND TO CONTAIN PRINTED CIRCUIT BOARD (PCB'S) THE ELECTRICAL CONTRACTOR SHALL REMOVE BALLAST FROM LIGHT FIXTURES AND DISPOSE OF IN APPROVED DISPOSAL CONTAINERS PROVIDED BY THE OWNER. THE OWNER SHALL BE RESPONSIBLE FOR PROPER DISPOSAL PER LOCAL, STATE AND FEDERAL LAWS AND PAY FOR ALL ASSOCIATED COST OF DISPOSAL.

E.C. SHALL BE RESPONSIBLE FOR DISPOSAL OF REMAINING LUMINARE PARTS AND ANY NON-PCB FIXTURES PER LOCAL, STATE, AND FEDERAL REGULATIONS AND PAY FOR ALL ASSOCIATED COST OF DISPOSAL.

E.C. SHALL DISCONNECT AND REMOVE ALL ELECTRICAL EQUIPMENT, (WHICH INCLUDES BUT NOT LIMITED TO DEVICES, FIXTURES, WIRING (CIRCUIT), CABLING, CONDUIT, ETC.), AS DESCRIBED AND SHALL GIVE THE OWNER AN OPPORTUNITY TO KEEP DEMOLISHED ELECTRICAL EQUIPMENT PRIOR TO THEM BEING DISCARDED.

Klassen corporation
Architecture Construction
2021 Westwind Drive
Bakersfield, CA 93301
(661) 324-3000
(661) 324-3900 Fax
www.klassencorp.com

REGISTERED PROFESSIONAL ENGINEER
KAREN A. MARTINEZ
E 18218
ELECTRICAL
STATE OF CALIFORNIA

The above drawings and specifications and ideas, designs and arrangements represented thereby are and shall remain the property of the architect: and no part thereof shall be copied, disclosed to others or used in connection with any work or project other than the specific project for which they have been prepared and developed without the written consent of the architect. Visual contact with these drawings or specifications shall constitute conclusive evidence of acceptance of these restrictions.

Written dimensions on these drawings shall have precedence over scaled dimension: contractors shall verify and be responsible for, all dimensions and conditions on the job and this office must be notified of any variations from the dimensions and conditions shown by these drawings. Shop details must be submitted to this office for approval before proceeding with fabrication.

TENANT IMPROVEMENTS
SAN JOAQUIN VALLEY PULMONARY
5801 TRUXTUN AVE, BAKERSFIELD CA 933309

MARK	ISSUED FOR	DATE
△	OWNER SD SUBMITTAL	07/01/19
△	OWNER DD SUBMITTAL	07/31/19
△	OWNER CD SUBMITTAL	08/15/19
△		
△		
△		
△		

Project No. : C19-148

LIGHTING DEMOLITION FLOOR PLAN

E3.0

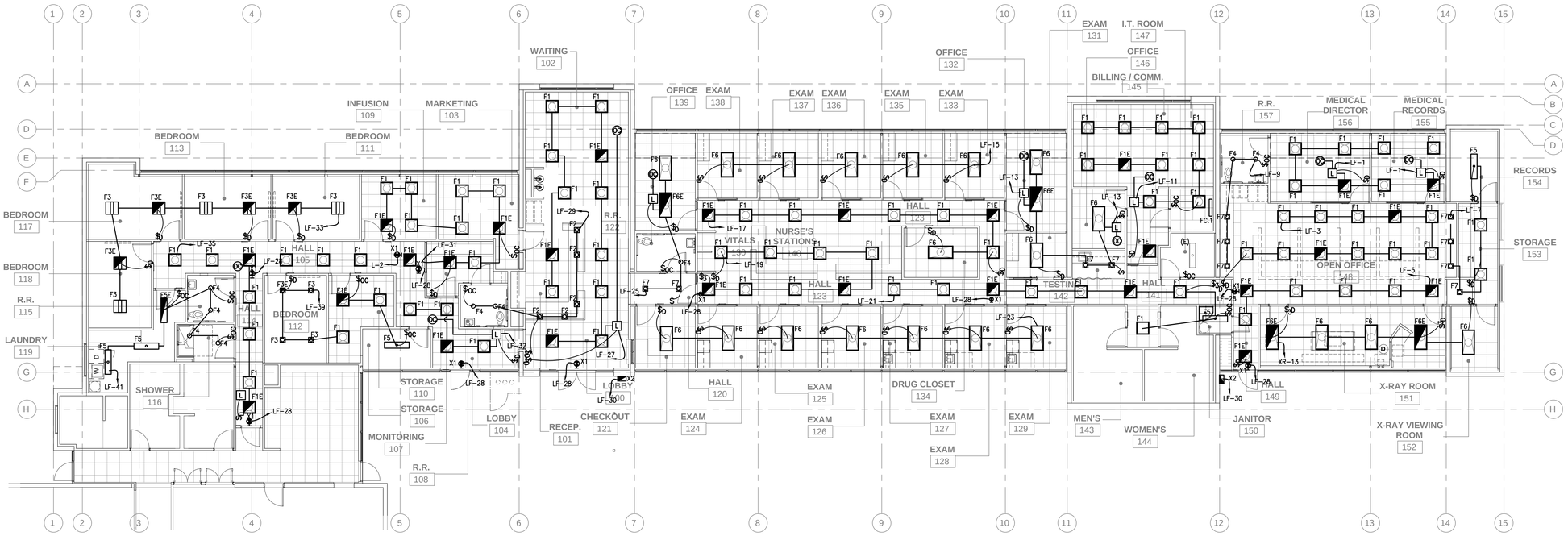

LIGHTING FLOOR PLAN

SCALE: 1/8" = 1'-0"

LIGHT FIXTURE SCHEDULE			VOLTAGE: 120V (U.O.N.)
TYPE	INPUT WATTS	DESCRIPTION AND MANUFACTURER	REMARKS
X1	3.8	LED EXIT/EMERGENCY UNIT COMBO (INTERIOR EXIT DOOR) VOLTAGE: MULTI-VOLT LAMP: (2) 4.12W LED MANUFACTURER: COMPASS – CCR LED	90 MIN EM LIGHT – – –
X2	12	EGRESS LIGHT – EXTERIOR VOLTAGE: MULTI VOLT LAMP: LED MANUFACTURER: DUAL PG	90 MIN EM LIGHT – – –
X3	.92	LED EGRESS LIGHT VOLTAGE: MULTI-VOLT LAMP: LED MANUFACTURER: COMPASS – CU2SD	90 MIN EM LIGHT
F1	48	2x2 RECESSED LIGHT VOLTAGE: 120 LAMP: LED MANUFACTURER: LITHONIA LIGHTING MODEL #2AVL2-40LSE-MVOLT-EZ1-LP840-N80	E INDICATE EM LIGHT 90 MIN EM LIGHT OPTION E10WLCP – –
F2	34.8	4" CAN LIGHT VOLTAGE: 120 LAMP: LED MANUFACTURER: LITHONIA LIGHTING MODEL #LDN4-35-15-L04AR-LSS-MVOLT-EZ1-N80	E INDICATE EM LIGHT 90 MIN EM LIGHT OPTION ELSD – –
F3	32	2x2 SURFACE MOUNT VOLTAGE: 120 LAMP: LED MANUFACTURER: LITHONIA LIGHTING MODEL #2BLTX2-40L-MVOLT-EZ1-LP840-N80	E INDICATE EM LIGHT 90 MIN EM LIGHT OPTION E10WLCP – –
F4	16.4	SURFACE MOUNT VOLTAGE: 120 LAMP: LED MANUFACTURER: PRESCOLITE LIGHTING MODEL #LBSQLEDA10L-30K8	E INDICATE EM LIGHT 90 MIN EM LIGHT OPTION E10WLCP – –
F5	10.85	SURFACE MOUNTED WRAPAROUND VOLTAGE: 120 LAMP: LED MANUFACTURER: COLUMBIA #LAWS-35ML-EU	
F6	47	2x4 RECESSED LIGHT VOLTAGE: 120 LAMP: LED MANUFACTURER: LITHONIA LIGHTING MODEL #2AVL4-40LSE-MVOLT-EZ1-LP840-N80	E INDICATE EM LIGHT 90 MIN EM LIGHT OPTION E10WLCP – –
F7	34.8	4" CAN LIGHT VOLTAGE: 120 LAMP: LED MANUFACTURER: LITHONIA LIGHTING MODEL #LDN4-35-15-L04AR-LSS-MVOLT-EZ1-N80	E INDICATE EM LIGHT 90 MIN EM LIGHT OPTION E10WLCP

* ALL EXTERIOR LIGHT FIXTURES SHALL BE DARK SKY COMPLIANT AND SHALL NOT EXCEED BUG RATING REQUIREMENTS AS SHOWN IN TABLE 5.106.8 OF THE CALIFORNIA ENERGY CODE.

LIGHTING CONTROLS SCHEDULE			
SYMBOL	DESCRIPTION AND MANUFACTURER	SYMBOL	
OS	OCCUPANCY SENSOR CEILING MOUNT – 360° SENSING ANGLE – COMMUNICATIONRJ45 "CAT-5 DAISY-CHAIN BUS" MANUFACTURER:nLIGHT #PDT-10	BR	nLIGHT DAISY-CHAIN BRIDGE WHERE REQUIRED, COORDINATE w/MANUFACTURER MOUNT CONCEALED ABOVE CEILING COMMUNICATIONRJ45 "CAT-5 BUS" MANUFACTURER:nLIGHT #PDT-10
PS	DAYLIGHT SENSOR CEILING MOUNT IN DAYLIGHT AREA – COMMUNICATIONRJ45 "CAT-5 DAISY-CHAIN BUS" MANUFACTURER:nLIGHT #nCM-ADC	G	CONTROL INTERFACE AND GATEWAY w/TIME SCHEDULING ONE PER BUILDING – WALL MOUNT – COMMUNICATIONRJ45 "CAT-5 DAISY-CHAIN BUS" MANUFACTURER:nLIGHT #GWY2 KIT
$D	DIGITAL FOUR SCENE LIGHT SWITCH COLOR TO MATCH WALL FINISH – WH=WHITE, IV=IVORY, AL=LIGHT ALMOND, GR=GREY, BK=BLACK COMMUNICATIONRJ45 "CAT-5 DAISY-CHAIN BUS" MANUFACTURER:nLIGHT #nPODM-4P-DX-WH	R	CONTROLLED RELAY FOR CONTROLLED RECEPTACLES FOR CONTROLLED RECEPTACLES IN OFFICE AREAS MOUNT CONCEALED ABOVE CEILING – 16A MAX COMMUNICATION:RJ45 "CAT-5 BUS" MANUFACTURER:nLIGHT #nSP16
$DC	DIGITAL FOUR SCENE LIGHT SWITCH COLOR TO MATCH WALL FINISH – WH=WHITE, IV=IVORY, AL=LIGHT ALMOND, GR=GREY, BK=BLACK COMMUNICATIONRJ45 "CAT-5 DAISY-CHAIN BUS" MANUFACTURER:nLIGHT #nWSX-LV-DX-WH	L	DIMMING RELAY PACK FOR CONTROLLED LIGHTS MOUNT CONCEALED ABOVE CEILING – 16A MAX COMMUNICATIONRJ45 "CAT-5e BUS" MANUFACTURER:ACUITYCONTROLS #nPS 80 EZ

* ALL EXTERIOR LIGHT FIXTURES SHALL BE DARK SKY COMPLIANT AND SHALL NOT EXCEED BUG RATING REQUIREMENTS AS SHOWN IN TABLE 5.106.8 OF THE CALIFORNIA ENERGY CODE.

CONTRACTOR TO FURNISH AND INSTALL NEW LIGHTS, LIGHTING CONTROL AND DIMMABLE SWITCH TYPICAL ALL ROOM. OCCUPANCY SENSOR SWITCH AT RESTROOM TYPICAL.

Klassen corporation
Architecture Construction
2021 Westwind Drive
Bakersfield, CA 93301
(661) 324-3000
(661) 324-3900 Fax
www.klassencorp.com

The above drawings and specifications and ideas, designs and arrangements represented thereby are and shall remain the property of the architect and no part thereof shall be copied, disclosed to others or used in connection with any work or project other than the specific project for which they have been prepared and developed without the written consent of the architect. Visual contact with these drawings or specifications shall constitute conclusive evidence of acceptance of these restrictions.

Written dimensions on these drawings shall have precedence over scaled dimension; contractors shall verify and be responsible for, all dimensions and conditions on the job and this office must be notified of any variation from the dimensions and conditions shown by these drawings. Shop details must be submitted to this office for approval before proceeding with fabrication.

TENANT IMPROVEMENTS
SAN JOAQUIN VALLEY PULMONARY
5801 TRUXTUN AVE, BAKERSFIELD CA 933309

DATE	ISSUED FOR	MARK
07/01/19	OWNER SD SUBMITTAL	△
07/31/19	OWNER DD SUBMITTAL	△
08/15/19	OWNER CD SUBMITTAL	△
		△
		△
		△
		△

Project No. : C19-148

LIGHTING FLOOR PLAN

E4.0

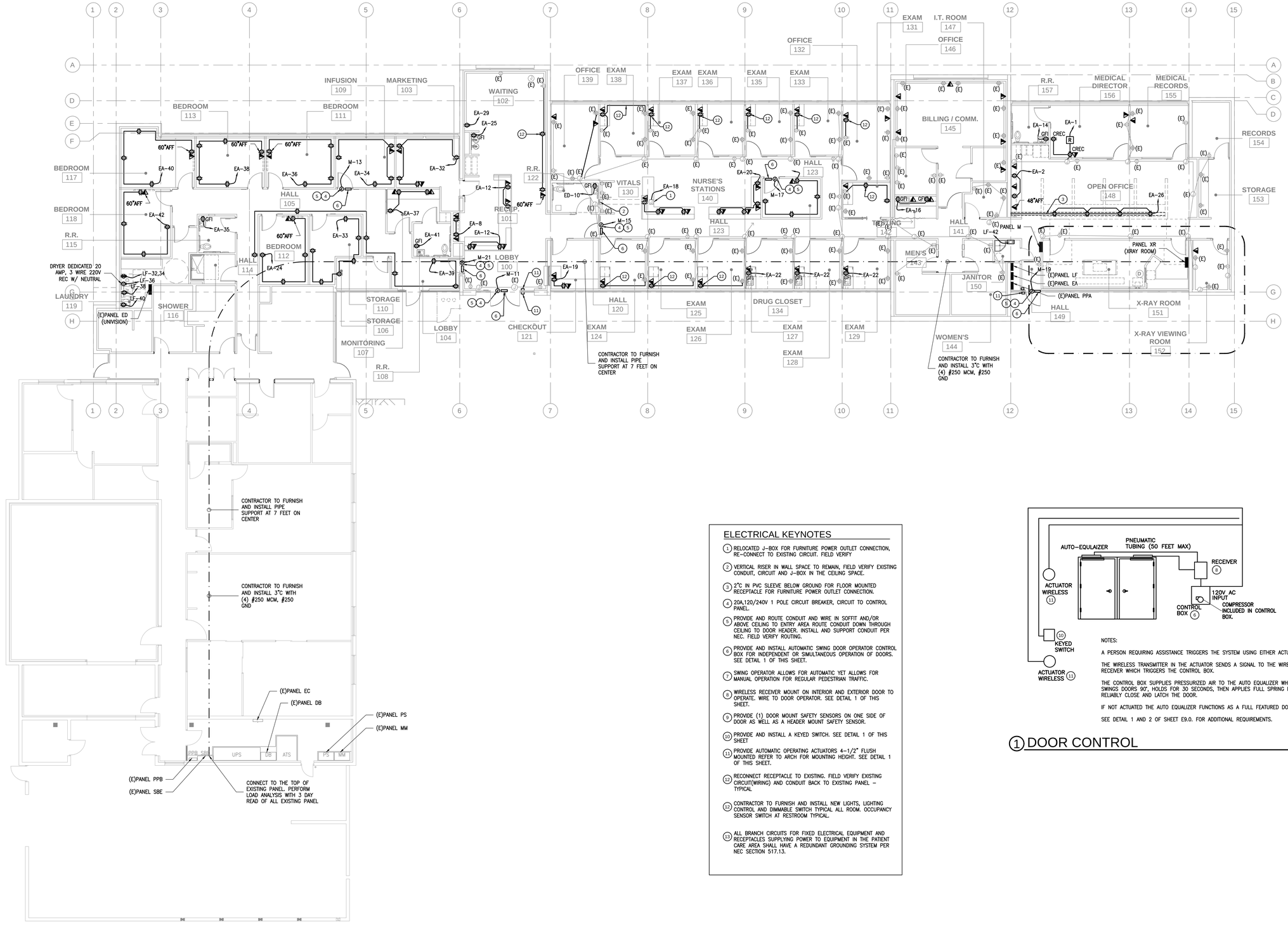

POWER FLOOR PLAN

SCALE: 1/8" = 1'-0"

ELECTRICAL KEYNOTES

1. RELOCATED J-BOX FOR FURNITURE POWER OUTLET CONNECTION, RE-CONNECT TO EXISTING CIRCUIT. FIELD VERIFY
2. VERTICAL RISER IN WALL SPACE TO REMAIN, FIELD VERIFY EXISTING CONDUIT, CIRCUIT AND J-BOX IN THE CEILING SPACE.
3. 2"C IN PVC SLEEVE BELOW GROUND FOR FLOOR MOUNTED RECEPTACLE FOR FURNITURE POWER OUTLET CONNECTION.
4. 20A,120/240V 1 POLE CIRCUIT BREAKER, CIRCUIT TO CONTROL PANEL.
5. PROVIDE AND ROUTE CONDUIT AND WIRE IN SOFFIT AND/OR ABOVE CEILING TO ENTRY AREA ROUTE CONDUIT DOWN THROUGH CEILING TO DOOR HEADER. INSTALL AND SUPPORT CONDUIT PER NEC. FIELD VERIFY ROUTING.
6. PROVIDE AND INSTALL AUTOMATIC SWING DOOR OPERATOR CONTROL BOX FOR INDEPENDENT OR SIMULTANEOUS OPERATION OF DOORS. SEE DETAIL 1 OF THIS SHEET.
7. SWING OPERATOR ALLOWS FOR AUTOMATIC YET ALLOWS FOR MANUAL OPERATION FOR REGULAR PEDESTRIAN TRAFFIC.
8. WIRELESS RECEIVER MOUNT ON INTERIOR AND EXTERIOR DOOR TO OPERATE. WIRE TO DOOR OPERATOR. SEE DETAIL 1 OF THIS SHEET.
9. PROVIDE (1) DOOR MOUNT SAFETY SENSORS ON ONE SIDE OF DOOR AS WELL AS A HEADER MOUNT SAFETY SENSOR.
10. PROVIDE AND INSTALL A KEYED SWITCH. SEE DETAIL 1 OF THIS SHEET
11. PROVIDE AUTOMATIC OPERATING ACTUATORS 4-1/2" FLUSH MOUNTED REFER TO ARCH FOR MOUNTING HEIGHT. SEE DETAIL 1 OF THIS SHEET.
12. RECONNECT RECEPTACLE TO EXISTING. FIELD VERIFY EXISTING CIRCUIT(WIRING) AND CONDUIT BACK TO EXISTING PANEL - TYPICAL
12. CONTRACTOR TO FURNISH AND INSTALL NEW LIGHTS, LIGHTING CONTROL AND DIMMABLE SWITCH TYPICAL ALL ROOM. OCCUPANCY SENSOR SWITCH AT RESTROOM TYPICAL.
13. ALL BRANCH CIRCUITS FOR FIXED ELECTRICAL EQUIPMENT AND RECEPTACLES SUPPLYING POWER TO EQUIPMENT IN THE PATIENT CARE AREA SHALL HAVE A REDUNDANT GROUNDING SYSTEM PER NEC SECTION 517.13.

NOTES:

A PERSON REQUIRING ASSISTANCE TRIGGERS THE SYSTEM USING EITHER ACTUATOR.

THE WIRELESS TRANSMITTER IN THE ACTUATOR SENDS A SIGNAL TO THE WIRELESS RECEIVER WHICH TRIGGERS THE CONTROL BOX.

THE CONTROL BOX SUPPLIES PRESSURIZED AIR TO THE AUTO EQUALIZER WHICH SLOWLY SWINGS DOORS 90°, HOLDS FOR 30 SECONDS, THEN APPLIES FULL SPRING POWER TO RELIABLY CLOSE AND LATCH THE DOOR.

IF NOT ACTUATED THE AUTO EQUALIZER FUNCTIONS AS A FULL FEATURED DOOR CLOSER.

SEE DETAIL 1 AND 2 OF SHEET E9.0. FOR ADDITIONAL REQUIREMENTS.

1 DOOR CONTROL

NTS

Klassen corporation
Architecture Construction
2021 Westwind Drive
Bakersfield, CA 93301
(661) 324-3000
(661) 324-3900 Fax
www.klassencorp.com

REGISTERED PROFESSIONAL ENGINEER
KARL J. MAYER
E 18218
ELECTRICAL
STATE OF CALIFORNIA

The above drawings and specifications and ideas, designs and arrangements represented thereby are and shall remain the property of the architect and no part thereof shall be copied, disclosed to others or used in connection with any work or project other than the specific project for which they have been prepared and developed without the written consent of the architect. Visual contact with these drawings or specifications shall constitute conclusive evidence of acceptance of these restrictions.

Written dimensions on these drawings shall have precedence over scaled dimension. contractors shall verify and be responsible for, all dimensions and conditions on the job and this office must be notified of any variation from the dimensions and conditions shown by these drawings. Shop details must be submitted to this office for approval before proceeding with fabrication.

TENANT IMPROVEMENTS
SAN JOAQUIN VALLEY PULMONARY
5801 TRUXTUN AVE, BAKERSFIELD CA 933309

MARK	ISSUED FOR	DATE
	OWNER SD SUBMITTAL	07/01/19
	OWNER DD SUBMITTAL	07/31/19
	OWNER CD SUBMITTAL	09/15/19

Project No. : C19-148

POWER FLOOR PLAN

E5.0

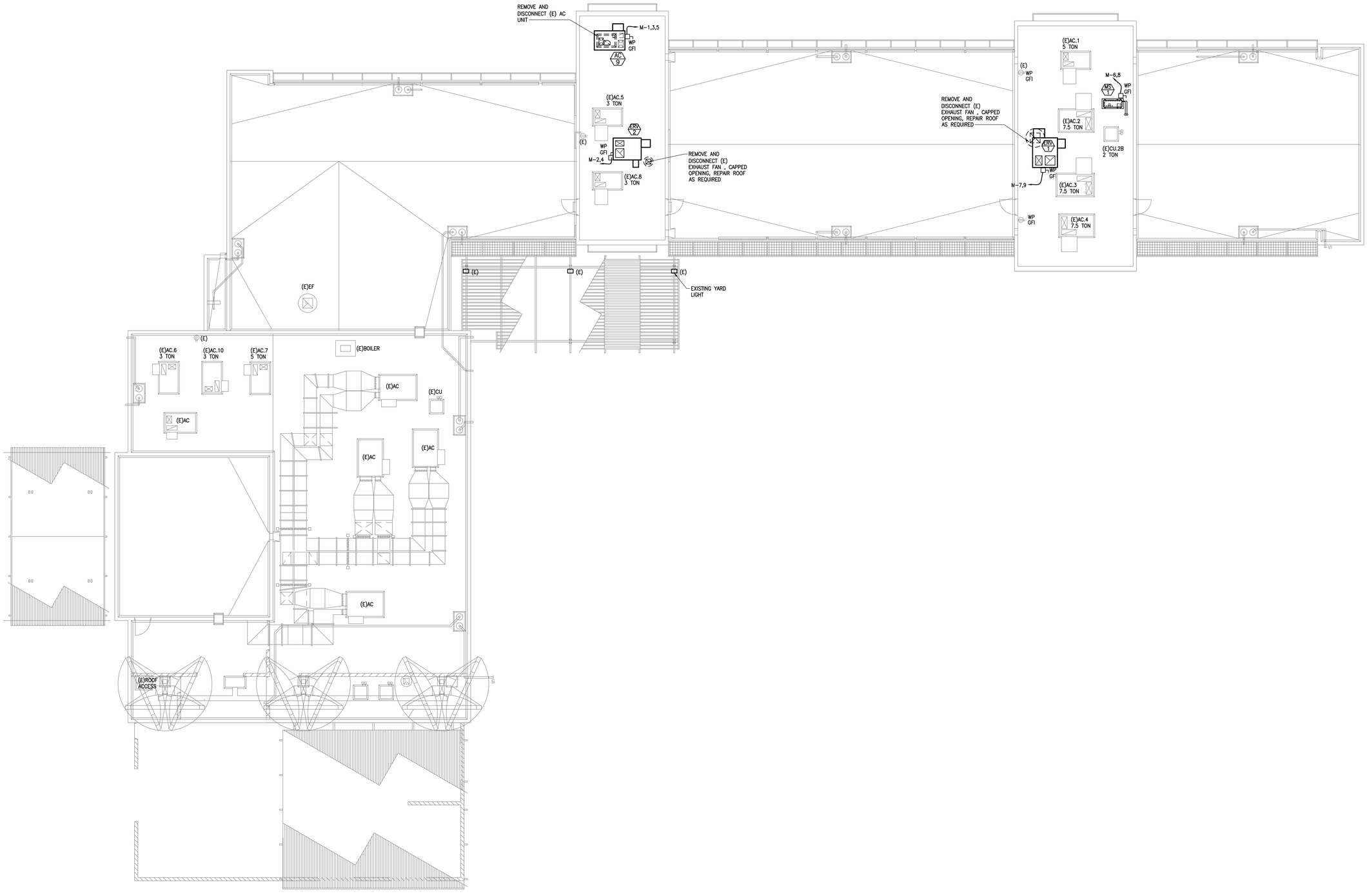

ELECTRICAL ROOF PLAN

SCALE: 1/8" = 1'-0"

Klassen corporation
Architecture Construction
2021 Westwind Drive
Bakersfield, CA 93301
(661) 324-3000
(661) 324-3900 Fax
www.klassencorp.com

REGISTERED PROFESSIONAL ENGINEER
E 18218
ELECTRICAL
STATE OF CALIFORNIA

The above drawings and specifications and ideas, designs and arrangements represented thereby are and shall remain the property of the architect and no part thereof shall be copied, disclosed to others or used in connection with any work or project other than the specific project for which they have been prepared and developed without the written consent of the architect. Visual contact with these drawings or specifications shall constitute conclusive evidence of acceptance of these restrictions.

Written dimensions on these drawings shall have precedence over scaled dimension; contractors shall verify and be responsible for, all dimensions and conditions on the job and this office must be notified of any variation from the dimensions and conditions shown by these drawings. Shop details must be submitted to this office for approval before proceeding with fabrication.

TENANT IMPROVEMENTS
SAN JOAQUIN VALLEY PULMONARY
5801 TRUXTUN AVE, BAKERSFIELD CA 933309

DATE	ISSUED FOR	MARK
07/01/19	OWNER SD SUBMITTAL	△
07/31/19	OWNER DD SUBMITTAL	△
08/15/19	OWNER CD SUBMITTAL	△

Project No. : C19-148

ELECTRICAL ROOF PLAN

E6.0

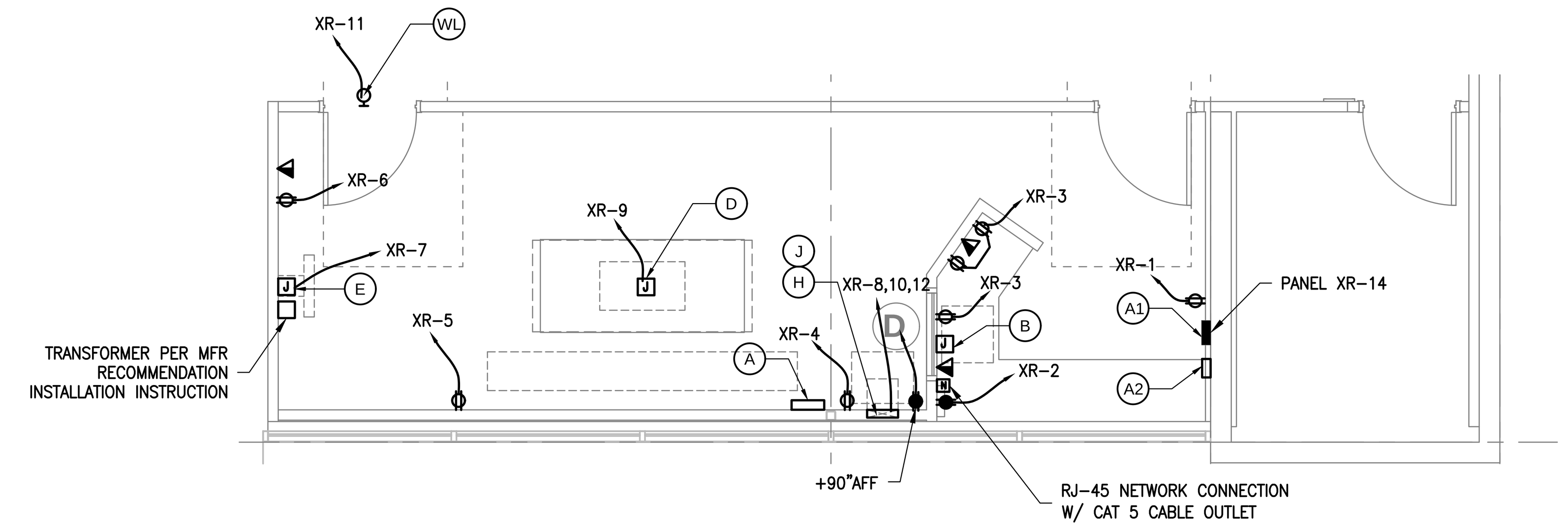

PARTIAL ELECTRICAL PLAN (XRAY ROOM)

SCALE: 1/4" = 1'-0"

Klassen corporation
Architecture Construction
2021 Westwind Drive
Bakersfield, CA 93301
(661) 324-3000
(661) 324-3900 Fax
www.klassencorp.com

REGISTERED PROFESSIONAL ENGINEER KAREN A. MARTINEZ E 18218 ELECTRICAL STATE OF CALIFORNIA

The above drawings and specifications and ideas, designs and arrangements represented thereby are and shall remain the property of the architect: and no part thereof shall be copied, disclosed to others or used in connection with any work or project other than the specific project for which they have been prepared and developed without the written consent of the architect. Visual contact with these drawings or specifications shall constitute conclusive evidence of acceptance of these restrictions.
Written dimensions on these drawings shall have precedence over scaled dimension: contractors shall verify and be responsible for, all dimensions and conditions on the job and this office must be notified of any variations from the dimensions and conditions shown by these drawings. Shop details must be submitted to this office for approval before proceeding with fabrication.

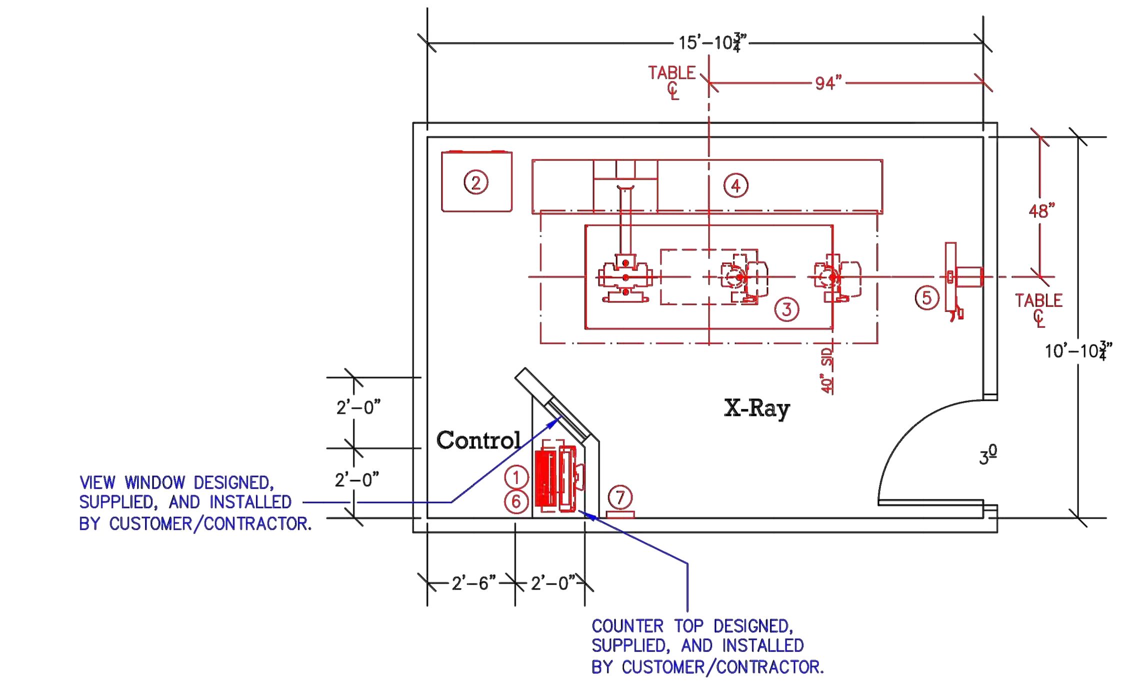

0 1' 2' 4'

MINIMUM CEILING HEIGHT 8'-0"
RECOMMENDED CEILING HEIGHT 9'-0"

EQUIPMENT LEGEND

CFCI.....................CONTRACTOR FURNISHED AND CONTRACTOR INSTALLED
OFCI.....................OWNER FURNISHED AND OWNER OR CONTRACTOR INSTALLED
OFOI.....................OWNER FURNISHED AND OWNER OR VENDOR INSTALLED

	ITEM	DESCRIPTION	SIZE	WT/LBS	BTU/HR	DETAIL SHEET
OFOI	1	QUANTUM WIDE SCREEN TOUCH PANEL MONITOR	19" W 3" D 13" H	12	N/A	
OFOI	2	QUANTUM ULTRA HF SERIES GENERATOR CABINET	24" W 20" D 34" H	431	4000	
OFOI	3	QUANTUM QT-750 RADIOGRAPHIC TABLE	79" W 36" D 33" H	500	230	
OFOI	4	QUANTUM QS-550 FLOOR MOUNTED TUBESTAND	120" L 48" D 92" H	600	873	
OFOI	5	QUANTUM QW-420 VERTICAL WALL STAND	24" W 14" D 86" H	130	N/A	
OFOI	6	RAYENCE DR WORKSTATION PC, MONITOR, AND KEYBOARD	22" W 20" D 11" H	90	400	
OFOI	7	RAYENCE WIRELESS ACCESS POINT	12" W 3" D 18" H	8.5	N/A	

CUSTOMER: Executive ER Urgent Care Northridge, CA
Equipment Layout / Legend

THESE DRAWINGS ARE SUBMITTED TO SUGGEST LOCATION OF ALL DIAGNOSTIC IMAGING EQUIPMENT AND ASSOCIATED APPARATUS, ELECTRICAL WIRING DETAILS, AND ROOM ARRANGEMENTS. IN PREPARING THIS DRAWING, EVERY EFFORT HAS BEEN MADE TO CONFORM DETAILS TO THE ACTUAL EQUIPMENT EXPECTED TO BE INSTALLED. HOWEVER, THESE DRAWINGS ARE NOT TO BE USED FOR ACTUAL CONSTRUCTION PURPOSES, AND THE PREPARER CANNOT ACCEPT ANY RESPONSIBILITY FOR DAMAGES RESULTING THEREFROM. CONSTRUCTION DRAWINGS TO BE PREPARED BY PURCHASER'S ARCHITECT OR CONTRACTOR.

PDES
Preferred Diagnostic Equipment Service, Inc.
1241 Carbide Drive
Corona, CA 92881
(800) 340-0760

DRAWN BY: R. Rider
DATE: 11/25/14
DWG. NO. 14343A
SHEET: A1

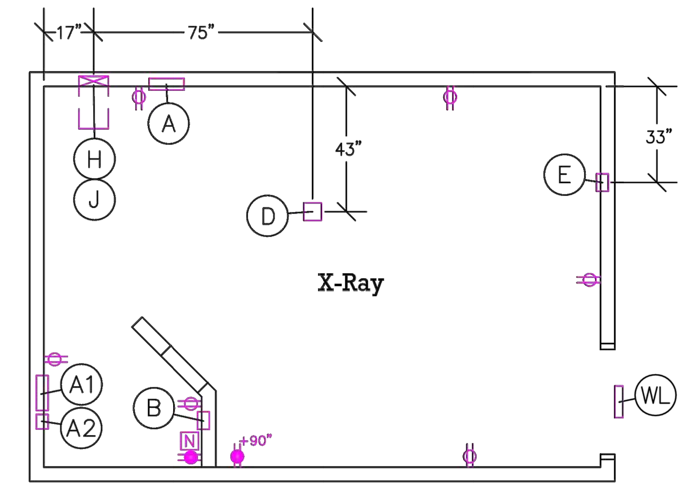

115 VAC, 15 Amp, Convenience Outlet
115 VAC, 15 Amp, Dedicated Outlet
N RJ-45 Network Connection w/Cat. 5 Cable Outlet
(consult with local representative for exact configuration)

0 1' 2' 4'

ELECTRICAL LEGEND

CFCI.....................CONTRACTOR FURNISHED AND CONTRACTOR INSTALLED
OFCI.....................OWNER FURNISHED AND OWNER OR CONTRACTOR INSTALLED
OFOI.....................OWNER FURNISHED AND OWNER OR VENDOR INSTALLED

	ITEM	DESCRIPTION
CFCI	A	MAIN CIRCUIT BREAKER IN APPROVED FLUSH MOUNTED NEMA ENCLOSURE WITH NEUTRAL AND GROUND ACCESSORIES. LOCATION INDICATED IS A SUGGESTION ONLY. EXACT LOCATION TO BE DETERMINED ON SITE AND PER LOCAL/NATIONAL CODE REQUIREMENTS. CONTRACTOR TO SUPPLY AND INSTALL HARD WIRES AS INDICATED ON SHEET "E3" FROM CIRCUIT BREAKER TO LOCATION "J".
CFCI	A1	120/208-240 VAC SINGLE PHASE, SN LOAD CENTER WITH SINGLE MAIN BREAKER. LOCATION INDICATED IS A SUGGESTION ONLY. EXACT LOCATION TO BE DETERMINED ON SITE AND PER LOCAL/NATIONAL CODE REQUIREMENTS. LOAD CENTER TO CONTAIN BREAKERS WITH RATINGS AS FOLLOWS: BRANCH CIRCUIT / BOX LOCATION / 120 VAC / 208-240 VAC TABLE / "D" / 20 AMPS / SPARE / / 15 AMPS / SPARE / / / 30 AMPS CONTRACTOR TO SUPPLY AND INSTALL HARD WIRES FROM CIRCUIT BREAKER IN LOAD CENTER TO "BOX LOCATION" AND LABEL ACCORDINGLY.
CFCI	A2	REMOTE SWITCH FOR OPERATION OF SHUNT TRIP FEATURE ON MAIN BREAKER "A". PROVIDE MUSHROOM TYPE "EMERGENCY OFF" RED BUTTON. LOCATION INDICATED IS A SUGGESTION ONLY. EXACT LOCATION TO BE DETERMINED ON SITE AND PER LOCAL/NATIONAL CODE REQUIREMENTS.
CFCI	B	6" x 6" x 4" DEEP JUNCTION BOX WITH SPLIT REMOVABLE COVER PLATE. COVER PLATE SHALL CONTAIN A 2" GROMMETED OPENING TO BE LOCATED 8" BELOW COUNTER TOP. PROVIDE GROMMETED OPENING IN COUNTER TOP FOR CABLE ACCESS TO EQUIPMENT.
CFCI	D	6" x 6" x 4" DEEP JUNCTION BOX. SPLIT REMOVABLE COVER SHALL CONTAIN A 2" GROMMETED OPENING. LOCATE COVER FLUSH IN FINISHED FLOOR.
CFCI	E	6" x 6" x 4" DEEP JUNCTION BOX WITH SPLIT REMOVABLE COVER PLATE. COVER PLATE SHALL CONTAIN A 2" GROMMETED OPENING TO BE LOCATED 43" ABOVE FINISHED FLOOR.
CFCI	H	12" x TROUGH COVER WIDTH, SPLIT REMOVABLE COVER PLATE SHALL CONTAIN A 12" x 3" GROMMETED OPENING SUPPLIED AND INSTALLED BY CONTRACTOR. LOCATE COVER PLATE 90" ABOVE FINISHED FLOOR.
CFCI	J	12" x TROUGH COVER WIDTH, SPLIT REMOVABLE COVER PLATE SHALL CONTAIN A 12" x 3" GROMMETED OPENING SUPPLIED AND INSTALLED BY CONTRACTOR. LOCATE COVER PLATE 12" ABOVE FINISHED FLOOR. PROVIDE 4' SEALTITE WITH 90° CONNECTORS AT EACH END. CONNECT TO "J" AND LEAVE 6' WIRE TAILS TO EQUIPMENT.
CFCI	WL	WARNING LIGHT. CONTRACTOR TO SUPPLY AND INSTALL LIGHT ABOVE ENTRANCE DOOR, IF REQUIRED BY CODE, AND RUN 3 #14 TO "J". LIGHT POWER TO BE SUPPLIED BY CONTRACTOR FROM SOURCE OTHER THAN X-RAY EQUIPMENT.

CUSTOMER: Executive ER Urgent Care Northridge, CA
Electrical Layout / Legend

THESE DRAWINGS ARE SUBMITTED TO SUGGEST LOCATION OF ALL DIAGNOSTIC IMAGING EQUIPMENT AND ASSOCIATED APPARATUS, ELECTRICAL WIRING DETAILS, AND ROOM ARRANGEMENTS. IN PREPARING THIS DRAWING, EVERY EFFORT HAS BEEN MADE TO CONFORM DETAILS TO THE ACTUAL EQUIPMENT EXPECTED TO BE INSTALLED. HOWEVER, THESE DRAWINGS ARE NOT TO BE USED FOR ACTUAL CONSTRUCTION PURPOSES, AND THE PREPARER CANNOT ACCEPT ANY RESPONSIBILITY FOR DAMAGES RESULTING THEREFROM. CONSTRUCTION DRAWINGS TO BE PREPARED BY PURCHASER'S ARCHITECT OR CONTRACTOR.

PDES
Preferred Diagnostic Equipment Service, Inc.
1241 Carbide Drive
Corona, CA 92881
(800) 340-0760

DRAWN BY: J. EVANS
DATE: 12/10/14
DWG. NO. 14343
SHEET: E1

TENANT IMPROVEMENTS
SAN JOAQUIN VALLEY PULMONARY
5801 TRUXTUN AVE, BAKERSFIELD CA 933309

INCOMING POWER REQUIREMENTS FOR X-RAY GENERATOR:

QUANTUM ULTRA HF QG-50 GENERATOR:

SELECT PROPER INCOMING VOLTAGE, DISTRIBUTION TRANSFORMER, WIRE SPECIFICATIONS, AND MAIN CIRCUIT BREAKER FROM THIS CHART BASED UPON AVAILABLE POWER SOURCE AT THE FACILITY

THREE PHASE INCOMING VOLTAGE	MAIN FACILITY DIST XFMR	INCOMING WIRE SIZE ≤50'	≤100'	≤200'	WIRING FROM FACILITY XFMR TO MAIN BREAKER IN X-RAY ROOM	X-RAY ROOM MAIN BREAKER
208 VAC	65 KVA	#0	#000	250MCM	0.014 OHMS IMPEDANCE	110 AMP

NOTE: VOLTAGE IS Y-CONFIGURATION, MEASURED LINE-TO-LINE, BALANCED TO NEUTRAL.

GROUND WIRE SIZE IS #4 AWG.

VOLTAGE FLUCTUATION ±5% FULL LOAD.

ALL WIRES TO BE THHN OR TFFN STRANDED COPPER THERMOPLASTIC 600 VOLT OR EQUIVALENT, UNLESS OTHERWISE NOTED.

MAXIMUM LENGTH FROM DISTRIBUTION TRANSFORMER TO ROOM MAIN BREAKER NOT TO EXCEED 200'.

CONTRACTOR SUPPLIED AND INSTALLED WIRING FROM MAIN CIRCUIT BREAKER "A" IN X-RAY ROOM TO X-RAY GENERATOR CABINET "J":

DISTANCE	208 VAC
0'-15' MAX	#4

NOTE: IF LENGTH OF RUN FROM "A" TO "J" EXCEEDS 15', INCREASE WIRE SIZE PROPORTIONALLY

SPECIAL GROUNDING:

A SPECIAL GROUNDING SYSTEM IS REQUIRED IN DIAGNOSTIC ROOMS BY SOME STATE AND LOCAL CODES. IT IS STRONGLY RECOMMENDED IN AREAS WHERE ELECTRICALLY SUSCEPTIBLE PATIENTS MAY BE EXAMINED OR TREATED UNDER PRESENT, FUTURE, OR EMERGENCY CONDITIONS. CONSULT THE GOVERNING ELECTRICAL CODE AND CONFER WITH APPROPRIATE HOSPITAL ADMINISTRATIVE PERSONNEL TO DETERMINE THE AREAS REQUIRING THIS GROUNDING SYSTEM. IF SUCH A SYSTEM IS REQUIRED, CONTRACTOR TO DESIGN AND INSTALL GROUNDING SYSTEM AND INCLUDE ALL METAL OBJECTS AND FIXTURES, OTHER THAN DIAGNOSTIC X-RAY EQUIPMENT.

IMPORTANT POWER NOTES:

POWER LINES FOR X-RAY SYSTEMS SHALL BE DEDICATED LINES RUN FROM NEAREST HOSPITAL MAIN DISTRIBUTION TRANSFORMER. UNDER NO CIRCUMSTANCES SHALL ANY OTHER ELECTRICAL EQUIPMENT BE CONNECTED TO THESE LINES NOW OR IN THE FUTURE.

LINE REQUIREMENTS:

A. NO TRANSIENTS (IMPULSES FROM 0.5 TO 800 MICROSECONDS) THAT EXCEED 30% OF NOMINAL PEAK LINE VOLTAGE AS MEASURED BY A DRANETZ POWER LINE ANALYZER (MODEL 606B OR EQUIVALENT) WITH THE SYSTEM IN STANDBY SHALL OCCUR.

B. TRANSIENTS EQUAL TO OR LESS THAN 30% OF NOMINAL PEAK LINE VOLTAGE SHALL NOT OCCUR MORE THAN ONCE PER HOUR OR EXCEED MORE THAN 12 IMPULSES PER 24-HOUR PERIOD.

C. 65 KVA, 208 VAC, THREE PHASE, 60 HZ, INCOMING LINE TO MAIN DISCONNECT "A" WITH ±5% VOLTAGE REGULATION UNDER INTERMITTENT, NO LOAD TO FULL LOAD CONDITIONS REQUIRED.

D. ELECTRICAL GROUNDING RESISTANCE LESS THAN 10 OHMS.

IF ANY OF THE ABOVE POWER SPECIFICATIONS REGARDING LINE TRANSIENTS, NOMINAL LINE VOLTAGE, AND VOLTAGE REGULATION CANNOT BE MET, THE FOLLOWING CORRECTIVE ACTION MUST BE TAKEN:

A. NOISE AND TRANSIENTS

TRANSIENTS AND NOISE SHALL BE REMOVED BY THE USE OF A TRANSIENT SUPPRESSOR AND/ OR ISOLATION TRANSFORMER (EITHER FARADAY TYPE OR ULTRA-HIGH TYPE) DEPENDING ON THE SEVERITY OF THE PROBLEM.

B. NOMINAL LINE VOLTAGE

A LINE MATCHING TRANSFORMER MUST BE UTILIZED.

C. VOLTAGE REGULATION

A REGULATION TRANSFORMER OR LINE CONDITIONER DEPENDING ON THE SEVERITY OF THE PROBLEM SHALL BE EMPLOYED TO MAINTAIN LINE VOLTAGE WITHIN 5% UNDER INTERMITTENT, NO LOAD TO FULLLOAD CONDITIONS.

D. GROUNDING

DEPENDING UPON THE SEVERITY OF THE PROBLEM, INCREASE GROUND RUNS TO FACILITY DISTRIBUTIONPOINT OR IN SEVERE CONDITIONS, NEW GROUND RODS TO BE INSTALLED AS REQUIRED.

CUSTOMER: Executive ER Urgent Care Northridge, CA
Electrical Notes / Power Specifications

THESE DRAWINGS ARE SUBMITTED TO SUGGEST LOCATION OF ALL DIAGNOSTIC IMAGING EQUIPMENT AND ASSOCIATED APPARATUS, ELECTRICAL WIRING DETAILS, AND ROOM ARRANGEMENTS. IN PREPARING THIS DRAWING, EVERY EFFORT HAS BEEN MADE TO CONFORM DETAILS TO THE ACTUAL EQUIPMENT EXPECTED TO BE INSTALLED. HOWEVER, THESE DRAWINGS ARE NOT TO BE USED FOR ACTUAL CONSTRUCTION PURPOSES, AND THE PREPARER CANNOT ACCEPT ANY RESPONSIBILITY FOR DAMAGES RESULTING THEREFROM. CONSTRUCTION DRAWINGS TO BE PREPARED BY PURCHASER'S ARCHITECT OR CONTRACTOR.

PDES
Preferred Diagnostic Equipment Service, Inc.
1241 Carbide Drive
Corona, CA 92881
(800) 340-0760

DRAWN BY: J. EVANS
DATE: 12/10/14
DWG. NO. 14343
SHEET: E3

SCHEMATIC TROUGH RISER DIAGRAM

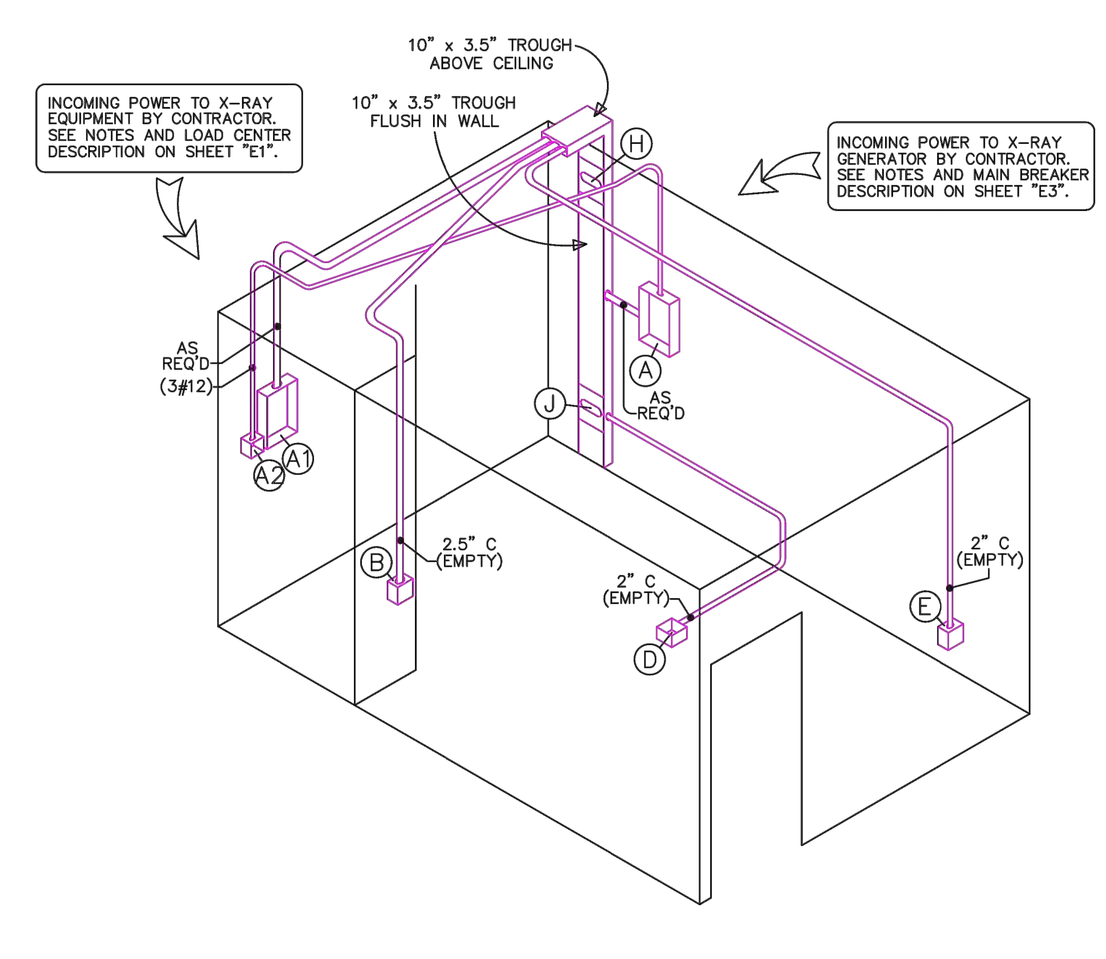

NOTE: CONDUIT RUNS SHOWN SCHEMATICALLY. BUILDING CONDITIONS WILL DETERMINE ACTUAL CONDUIT RUNS. KEEP ALL RUNS AS SHORT AS POSSIBLE. ALL CONDUIT SIZES MUST MEET LOCAL AND NATIONAL CODE REQUIREMENTS.

NO SCALE

CUSTOMER: Executive ER Urgent Care Northridge, CA
Schematic Trough Riser Diagram

THESE DRAWINGS ARE SUBMITTED TO SUGGEST LOCATION OF ALL DIAGNOSTIC IMAGING EQUIPMENT AND ASSOCIATED APPARATUS, ELECTRICAL WIRING DETAILS, AND ROOM ARRANGEMENTS. IN PREPARING THIS DRAWING, EVERY EFFORT HAS BEEN MADE TO CONFORM DETAILS TO THE ACTUAL EQUIPMENT EXPECTED TO BE INSTALLED. HOWEVER, THESE DRAWINGS ARE NOT TO BE USED FOR ACTUAL CONSTRUCTION PURPOSES, AND THE PREPARER CANNOT ACCEPT ANY RESPONSIBILITY FOR DAMAGES RESULTING THEREFROM. CONSTRUCTION DRAWINGS TO BE PREPARED BY PURCHASER'S ARCHITECT OR CONTRACTOR.

PDES
Preferred Diagnostic Equipment Service, Inc.
1241 Carbide Drive
Corona, CA 92881
(800) 340-0760

DRAWN BY: J. EVANS
DATE: 12/10/14
DWG. NO. 14343
SHEET: E4

DATE	ISSUED FOR	MARK
07/01/19	OWNER SD SUBMITTAL	
07/31/19	OWNER DD SUBMITTAL	
08/15/19	OWNER CD SUBMITTAL	

Project No.: C19-148

PARTIAL ELECTRICAL PLAN, PDES PLAN

E7.0

PREFACE

These drawings have been prepared to provide siting, electrical, mechanical and environmental specifications required to accomodate the installation and operation of diagnostic imaging equipment and sub-components illustrated.

The layout(s) provides for components purchased from and/or provided by the equipment Vendor and shall serve as a guide for installation by the local Service/Installation Representatives.

Information in this drawing package relating to building/facility specifications that will support Vendor components such as electrical, structural, mechanical, and environmental requirements, shall be utilized as a guide by the Customer's Architect and/or Contractor. Facility conditions will dictate actual construction methods and materials applied. However, ALL methods and materials must comply with Vendor specifications, as well as Local and/or National Building Codes having jurisdiction.

The quality of construction methods, materials, and conformance to vendor specifications and tolerances will affect equipment performance.

DISCLAIMER

These drawings are REFERENCE DRAWINGS only, illustrating general equipment layout and facility-related equipment requirements. The information contained in these drawings is provided for the use of Customers and/or their designated Architects, Engineers, or other Design/Construction professionals in the preparation of official construction documents. The equipment Vendor and preparer of these drawings makes no warranty or representation, either express or implied, with respect to the attached drawings, and in no event will either be liable for any direct, indirect, special, incidental, or consequential damages resulting in any manner from use of the attached drawings.

These drawings are provided with the understanding that providing such drawings does not alter any of the terms and conditions of sale between equipment Vendor and Customer.

These drawings are NOT TO BE USED AS CONSTRUCTION DOCUMENTS. It is the responsibility of the Customer or his/her designate to insure the correct siting and placement of all purchased diagnostic equipment based on these reference drawings. The Customer or his/her designate shall be responsible for the complete and accurate incorporation of all specifications and requirements from these reference drawings into official construction drawings and documents for use in the preparation of the site.

The attached drawings are subject to change without notice. This disclaimer may not be modified by anyone other than the preparer.

Quantum MEDICAL IMAGING

AUTHORIZED DEALER:

Preferred Diagnostic Equipment Service, Inc.
1241 Carbide Drive Corona, CA 92881

PREPARED FOR:

Executive ER Urgent Care
Northridge, CA

PREPARED BY:

Medical Design, Inc.
1251 Eugenia Terrace Lawrenceville, GA 30046

DRAWING INDEX		REV	DATE
COVER SHEET	- C1	-	12/10/14
NOTES / CUSTOMER RESPONSIBILITIES	- N1	-	12/10/14
EQUIPMENT LAYOUT / LEGEND	- A1	A	11/25/14
STRUCTURAL LAYOUT / LEGEND	- S1	-	12/10/14
STRUCTURAL DETAILS	- S2	-	12/10/14
STRUCTURAL NOTES	- S3	-	12/10/14
ELECTRICAL LAYOUT / LEGEND	- E1	-	12/10/14
ELECTRICAL DETAILS	- E2	-	12/10/14
ELECTRICAL NOTES / POWER SPECIFICATIONS	- E3	-	12/10/14
SCHEMATIC TROUGH RISER DIAGRAM	- E4	-	12/10/14

14343

GENERAL NOTES:

ALL WORK EXCEPT INSTALLATION OF DIAGNOSTIC IMAGING EQUIPMENT IS TO BE DONE BY OTHERS THAN EQUIPMENT VENDOR.

PURCHASER, AT HIS EXPENSE, SHALL EMPLOY A REGISTERED PHYSICIST TO SPECIFY AND TEST ALL RADIATION PROTECTION REQUIRED.

PURCHASER OR HIS CONTRACTOR IS RESPONSIBLE FOR VERIFYING ALL PASSAGE OPENINGS ARE ADEQUATE FOR THE TRANSPORTATION OF DIAGNOSTIC IMAGING EQUIPMENT FROM SHIPPING VAN INTO EXAM ROOM, AND IS RESPONSIBLE FOR ANY RIGGING, SPECIAL HANDLING, OR FACILITY MODIFICATIONS NECESSARY TO MEET THE REQUIREMENTS FOR SAFE PASSAGE OF EQUIPMENT.

CUSTOMER TO PROVIDE A LOCKABLE STORAGE AREA IN OR NEAR THE PROPOSED ROOM FOR STORAGE OF TOOLS AND TEST EQUIPMENT USED BY SERVICE ENGINEERS DURING THE INSTALLATION.

CUSTOMER TO PROVIDE A DUST FREE, AIR CONDITIONED, AND HUMIDIFIED ENVIRONMENT FOR THE STORAGE OF ALL DIAGNOSTIC IMAGING EQUIPMENT IF THE PROPOSED INSTALLATION SITE IS NOT COMPLETE AT THE TIME OF EQUIPMENT DELIVERY. CUSTOMER IS RESPONSIBLE FOR DELIVERY OF EQUIPMENT FROM STORAGE TO THE PREPARED SITE AS NEEDED.

LIGHTING FIXTURES, VENTS, SPRINKLERS, ETC. TO BE FLUSH WITH FINISHED CEILING.

ANY BACKING REQUIRED SHALL BE A MINIMUM THICKNESS OF 1/2" (WOOD) OR 3/16" (STEEL) SECURED TO A MINIMUM OF THREE STUDS WITH THE FACE OF THE BACKING FLUSH WITH THE LINE OF STUDS. ALL BACKING SHALL EXTEND A MINIMUM OF 4" ABOVE AND 4' BELOW MOUNTING POINTS.

ALL CEILINGS TO BE 2' x 4' LIFT-OUT PANELS OF MATERIAL ACCEPTABLE TO CODES IF APPROVED BY CODES. LEAVE 12" MINIMUM ABOVE CEILING TILES FOR SERVICE ACCESS.

ALL DIMENSIONS ARE FROM FINISHED SURFACES UNLESS OTHERWISE INDICATED ON THESE PLANS. CONTACT EQUIPMENT VENDOR OR DESIGNATED REPRESENTATIVES SHOULD ACTUAL ROOM DIMENSIONS VARY FROM THOSE INDICATED ON THESE DRAWINGS.

ALL WORK SHALL COMPLY WITH LOCAL, STATE, AND FEDERAL BUILDING CODES THAT HAVE JURISDICTION.

MODIFICATIONS SHALL NOT BE MADE TO THESE DRAWINGS OR ANY CONSTRUCTION CHANGES APPROVED WITHOUT WRITTEN CONSENT FROM AN AUTHORIZED EQUIPMENT VENDOR PERSONNEL OR ITS DESIGNATED REPRESENTATIVE.

PURCHASER OR HIS CONTRACTOR IS RESPONSIBLE FOR PROVIDING AND INSTALLING ALL PLUMBING, WALL, FLOOR, OR CEILING REINFORCING UNISTRUT, ELECTRICAL CONDUIT, RECEPTACLES, WIRE, MAIN SWITCHES, PANEL BOARDS, JUNCTION BOXES AND COVER PLATES, BUSHINGS, WIRE OR CABLE DUCT, OR TROUGH SPECIFIED OR REQUIRED FOR THE SATISFACTORY INSTALLATION OF DIAGNOSTIC IMAGING EQUIPMENT.

ANY DETAILS SHOWN IN THESE DRAWINGS ARE SAMPLE DETAILS BASED UPON STANDARD BUILDING PRACTICES AND ARE NOT INTENDED FOR CONSTRUCTION USE. ACTUAL CONSTRUCTION DETAILS, LOADING FACTORS, SPECIFICATIONS, AND ALL CALCULATIONS SHALL BE PREPARED BY A PROFESSIONAL ENGINEER AT THE PURCHASER'S EXPENSE.

INSTALLATION OF DIAGNOSTIC IMAGING EQUIPMENT WILL NOT COMMENCE UNTIL THE PROPOSED SPACE MEETS ALL THE REQUIREMENTS INDICATED WITHIN THIS SET OF DRAWINGS AND / OR REQUIRED BY CODES. THE PROPOSED SPACE MUST BE DUST FREE, AIR CONDITIONED, AND HUMIDIFIED AS REQUIRED. FILM PROCESSING MUST BE READILY AVAILABLE FOR EQUIPMENT CALIBRATION AND TESTING.

EXAM ROOM FLOOR UNDER ALL FLOOR MOUNTED X-RAY EQUIPMENT SHALL BE FLAT AND LEVEL TO WITHIN 0.125" IN ALL DIRECTIONS IN A 10' SPAN.

SITE PREPARATION REQUIREMENTS:

A SMOOTH EFFICIENT INSTALLATION IS VITAL TO THE EQUIPMENT VENDOR AND ITS CUSTOMERS. THE FOLLOWING ARE THE MINIMUM REQUIREMENTS WHICH MUST BE MET PRIOR TO EQUIPMENT INSTALLATION:

1. ALL WALLS TO BE PAINTED OR PAPERED, BASEBOARDS INSTALLED, FLOORS TILED OR COVERED, AND CEILING PANELS AND LIGHT FIXTURES, LIGHT SWITCHES INSTALLED.
2. ALL DOORS, WINDOWS, AND PROTECTIVE BARRIERS INSTALLED WITH ALL HARDWARE OPERATIONAL.
3. ELECTRICAL SYSTEM INCLUDING MAINSWITCHES, LOAD CENTERS, JUNCTION BOXES, CONDUITS, WIRES, DUCTS, RACEWAYS, RECEPTACLES, AND COVERPLATES INSTALLED AND OPERATIONAL.
4. INCOMING POWER SUPPLIES CONNECTED TO X-RAY MAINSWITCH AND LOAD CENTER. ALL BRANCH CIRCUIT BREAKERS AND BRANCH WIRING INSTALLED, LABELED, AND TERMINATED BY CONTRACTOR.
5. ROOM LIGHTING INSTALLED AND OPERATIONAL. PROVIDE ALL NECESSARY CONTACTORS AND SWITCHES REQUIRED FOR LIGHT SWITCHES/DIMMERS AS REQUIRED.
6. ALL CONVENIENCE OUTLETS INSTALLED AND OPERATIONAL.
7. OVERHEAD SUPPORT SYSTEM PROPERLY INSTALLED WITH BOTTOM MEMBERS LEVEL TO WITHIN 1/16", PARALLEL, AND FREE OF DEFLECTION IN ALL DIRECTIONS.
8. ALL CONTRACTOR SUPPLIED WIRES OR CABLES PULLED, TAGGED, AND TERMINATED.
9. DUST-FREE ENVIRONMENT WITHIN AND SURROUNDING THE PROCEDURE ROOM.
10. COMPLETE OPERATIONAL HVAC (HEATING, VENTILATING, AND AIR CONDITIONING) SYSTEM WITHIN SPECIFICATIONS LISTED OR REQUIRED TO MAINTAIN EQUIPMENT TO BE INSTALLED.
11. ALL ARCHITECTURAL ITEMS FINISHED AND OPERATIONAL INCLUDING CASEWORK, SINKS, DOORS, RAISED FLOORING, WINDOWS, AND WALL SUPPORTS.
12. ANY PLUMBING COMPLETED AND OPERATIONAL.
13. EQUIPMENT VENDOR DOES NOT INSTALL LEAD PROTECTIVE SCREENS, PANELS, OR LEAD GLASS WINDOWS AND FRAMES. THIS WORK IS TO BE PERFORMED BY THE CUSTOMER OR HIS CONTRACTOR.

WIRING NOTES:

ELECTRICAL CONTRACTOR TO SUPPLY AND INSTALL ALL BOXES, CONDUITS, DUCT, WIRE, MAIN SWITCHES, ETC. REQUIRED TO MAKE THE X-RAY SYSTEM OPERATIONAL WITHIN THE SPACE PROVIDED.

ALL WIRES TO BE TYPE THHN, OR THW STRANDED COPPER UNLESS OTHERWISE NOTED.

CONDUIT AND DUCT RUNS ARE SHOWN SCHEMATICALLY. ACTUAL BUILDING CONDITIONS WILL DETERMINE CONDUIT AND DUCT ROUTES. MAKE THE MOST DIRECT ROUTE POSSIBLE FOR THE SHORTEST POINT TO POINT DISTANCES BETWEEN OPENINGS.

CONDUIT TURNS TO HAVE LARGE, SWEEPING BENDS WITH MINIMUM RADIUS AS SPECIFIED IN NEC ART. 346-10. 90° ELBOWS ARE NOT ACCEPTABLE.

ELECTRICAL CONTRACTOR TO PROVIDE 10'-0" WIRE TAILS FOR ALL WIRES UNLESS OTHERWISE SPECIFIED AND IDENTIFY BOTH ENDS OF ALL WIRES.

ELECTRICAL CONTRACTOR TO PROVIDE 120 VAC CONVENIENCE OUTLETS WITHIN 10' OF ALL X-RAY EQUIPMENT INDICATED. ADDITIONAL OUTLETS MAY BE REQUIRED BY CODE. CONSULT CODES FOR REQUIREMENTS AND OUTLET PLACEMENT ABOVE FLOOR OR COUNTER TOPS AS REQUIRED.

PROVIDE REMOVABLE COVERS FOR ALL BOXES AND LEAVE PULL WIRE IN ALL CONDUITS.

ALL CONDUITS INDICATED ON THESE DRAWINGS SHALL CONNECT TO THE CONTROL CABLE SIDE (LARGE AREA) OF TROUGH UNLESS OTHERWISE NOTED.

CONTRACTOR MAY USE AND OR ADAPT ALL EXISTING CONDUITS, BOXES, WIRES, MAIN SWITCHES, ETC., WHERE POSSIBLE.

ALL BOXES, STUBBED CONDUITS, WIREMOLD, DUCT, MAIN BREAKERS, LOAD CENTERS, ETC. INDICATED ON THESE DRAWINGS HAVE BEEN COORDINATED WITH X-RAY EQUIPMENT PLACEMENT. CONTACT EQUIPMENT VENDOR FOR PROPER VERIFICATION OF EQUIPMENT PLACEMENT AND CLEARANCES BEFORE MAKING ANY CHANGES TO THE LOCATIONS INDICATED ON THESE DRAWINGS.

ELECTRICAL POWER FOR X-RAY EQUIPMENT REQUIRES VERY LARGE CURRENTS FOR EXTREMELY SHORT PERIODS OF TIME WHILE THE SUPPLY VOLTAGE MUST REMAIN STABLE. SEE ELECTRICAL SHEETS "E" IN THIS SET FOR DETAILS.

POWER LINES FOR X-RAY SYSTEMS SHALL BE DEDICATED LINES RUN DIRECTLY FROM NEAREST HOSPITAL MAIN DISTRIBUTION TRANSFORMER OR DISTRIBUTION PANEL NOT SUPPLYING "SPARKY" OR HIGH INSTANTANEOUS PEAK LOAD DEVICES (I.E.; MOTORS, ELEVATORS, AIR CONDITIONERS, CLOCK TIMERS, ETC.). UNDER NO CIRCUMSTANCES SHALL ANY OTHER ELECTRICAL EQUIPMENT BE CONNECTED TO THE X-RAY POWER LINES NOW OR IN THE FUTURE.

ELECTRICAL CONTRACTOR SHALL BE RESPONSIBLE FOR SUPPLYING AND INSTALLING PATIENT GROUNDING SYSTEM WHEN REQUIRED BY CODE. GROUNDING SYSTEM TO COMPLY WITH NEC ARTICLE 517 AND NFPA 70.

GENERAL ROOM LIGHTING IS NOT INDICATED ON THESE DRAWINGS AND IS THE RESPONSIBILITY OF THE PURCHASER OR HIS ARCHITECT AND ELECTRICAL ENGINEER. IT IS SUGGESTED THAT DIMMERS BE USED TO CONTROL LIGHT LEVELS, ESPECIALLY IN AREAS WHERE MONITORS ARE USED.

TROUGH / RACEWAY NOTES:

ALL TROUGH TO BE SQUARE D, WALKER DUCT OR EQUAL FLOOR AND WALL TRENCH DUCT WITH REMOVABLE COVERS THE FULL LENGTH. ALL TROUGH TO BE 10" X 3 1/2", OR AS INDICATED IN THESE DRAWINGS, OR PROVIDE THE EQUIVALENT NOMINAL SIZE AVAILABLE. ALL FLUSH DUCT TO HAVE OVERSIZED COVERS AND ALL SURFACE MOUNTED OR ABOVE CEILING DUCT TO HAVE COVERS THE SAME SIZE AS THE DUCT. ALL FLUSH IN FLOOR DUCT TO HAVE GASKETED REMOVABLE COVERS WITH TILE TRIM TO PREVENT ENTRY OF LIQUIDS. CONTACT MANUFACTURER FOR ALL ROUGH IN SIZES REQUIRED.

ALL TROUGH SHALL BE FLUSH WITH FINISHED SURFACES UNLESS OTHERWISE SPECIFIED AND PROVIDED WITH OVERSIZED REMOVABLE COVERS THE FULL LENGTH. COVERS SHALL BE CLEAR OF ANY OBSTRUCTION FOR INSERTION OF VENDOR SUPPLIED CABLES. IF IT IS NECESSARY THAT THE TROUGH BE INSTALLED OTHER THAN AS INDICATED ON THESE PLANS, CONTACT EQUIPMENT VENDOR OR VENDOR REPRESENTATIVE FOR PROPER VERIFICATION OF ALL EQUIPMENT PLACEMENT AND TROUGH CLEARANCES.

ALL DUCT ABOVE CEILING OR BELOW FLOOR TO BE PROVIDED WITH REMOVABLE COVERS FACING UP. PROVIDE ADEQUATE SPACE ABOVE DUCT FOR INSTALLATION OF VENDOR SUPPLIED CABLES AT TIME OF EQUIPMENT INSTALLATION. MAINTAIN MINIMUM CLEARANCE ABOVE CEILING OR BELOW FLOOR TO DUCT FOR SHORTEST CABLE RUNS. DUCT INSTALLED MORE THAN 12" ABOVE CEILING OR 18" BELOW FLOOR IS UNACCEPTABLE.

GENERAL CONTRACTOR SHALL PAINT ALL EXPOSED AREAS OF WALL AND CEILING TROUGH. CONSULT WITH THE EQUIPMENT PURCHASER ON MATCHING OR ACCENT COLOR.

CONTRACTOR TO SUPPLY AND INSTALL TWO REMOVABLE DIVIDER STRIPS WITHIN DUCT TO FORM THREE EQUAL AREAS FOR SEPARATION OF HIGH VOLTAGE CABLES, LOW VOLTAGE CABLES, AND DATA CABLES. PROVIDE CROSSOVER TUNNELS AT ALL INTERSECTIONS AS REQUIRED.

ENVIRONMENTAL NOTES:

TEMPERATURE MUST BE REGULATED BETWEEN 68°-78°F WITH RELATIVE HUMIDITY REGULATED BETWEEN 45%-70% NON-CONDNSING.

HEAT OUTPUT OF EQUIPMENT IN ONE AREA MUST NOT EFFECT TEMPERATURE AND HUMIDITY REGULATIONS IN OTHER AREAS. IT IS STRONGLY RECOMMENDED THAT EACH AREA BE INDIVIDUALLY ENVIRONMENTALLY CONTROLLED WITH A THERMOSTAT.

AN AUDIBLE THERMAL ALARM IS RECOMMENDED IN THE CONTROL AREA TO ALERT THE SYSTEM OPERATOR TO TURN THE SYSTEM OFF SHOULD THE AMBIENT TEMPERATURE IN ANY AREA EXCEED THE SPECIFICATIONS LISTED ABOVE.

SUPPLY DIFFUSERS SHALL NOT CAUSE DIRECT AIR CURRENTS ON PATIENT OR OPERATORS.

CUSTOMER: Executive ER Urgent Care Northridge, CA
Notes / Customer Responsibilities

THESE DRAWINGS ARE SUBMITTED TO SUGGEST LOCATION OF ALL DIAGNOSTIC IMAGING EQUIPMENT AND ASSOCIATED APPARATUS, ELECTRICAL WIRING DETAILS, AND ROOM ARRANGEMENTS. IN PREPARING THIS DRAWING, EVERY EFFORT HAS BEEN MADE TO CONFORM DETAILS TO THE ACTUAL EQUIPMENT EXPECTED TO BE INSTALLED. HOWEVER, THESE DRAWINGS ARE NOT TO BE USED FOR ACTUAL CONSTRUCTION PURPOSES, AND THE PREPARER CANNOT ACCEPT ANY RESPONSIBILITY FOR DAMAGES RESULTING THEREFROM. CONSTRUCTION DRAWINGS TO BE PREPARED BY PURCHASER'S ARCHITECT OR CONTRACTOR.

PDES
Preferred Diagnostic Equipment Service, Inc.
1241 Carbide Drive
Corona, CA 92881
(800) 340-0760

DRAWN BY: J. EVANS
DATE: 12/10/14
DWG. NO. 14343
SHEET: N1

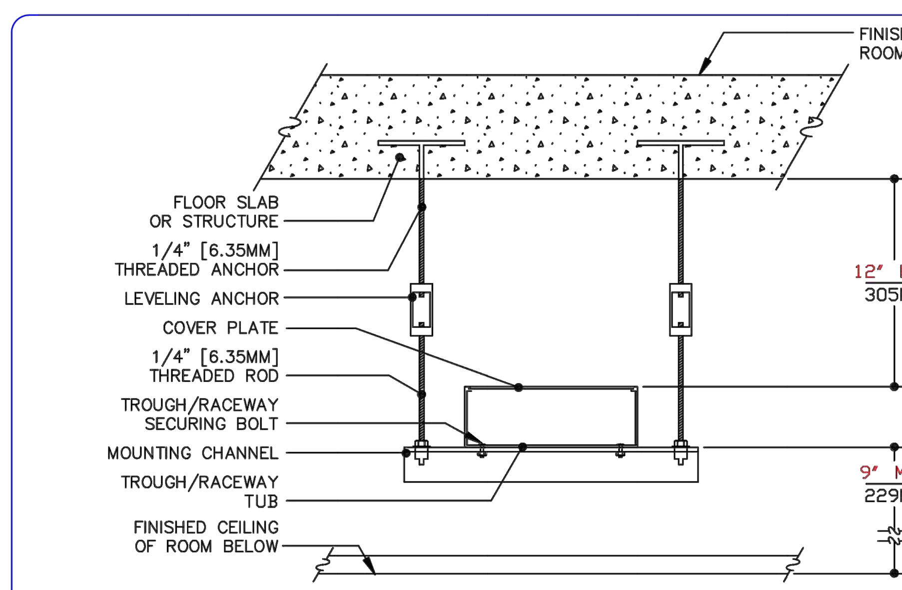

CFCI — TYPICAL TROUGH / RACEWAY MOUNTING DETAIL BELOW FLOOR OR ABOVE CEILING — NO SCALE

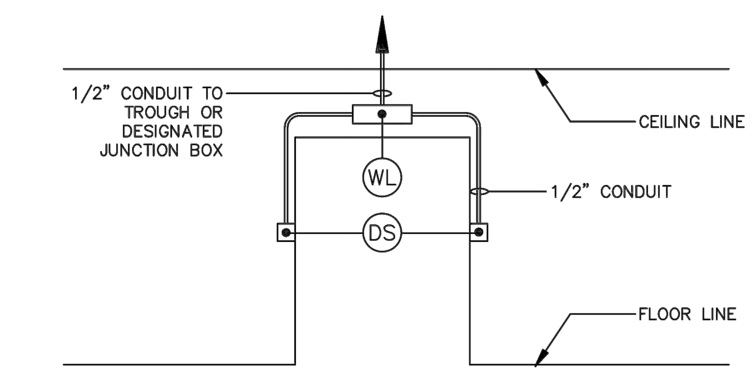

NOTES:

- DOORSWITCH TO BE LOCATED ON HINGE SIDE OF DOOR JAMB. SWITCH TO HAVE NORMALLY OPEN CONTACT (SWITCH CLOSES WHEN DOOR CLOSES).
- IN CASE OF A DOUBLE JAMB, ONE DOOR SWITCH SHOULD BE LOCATED ON EACH SIDE.
- SEE ELECTRICAL LAYOUT FOR DOOR SWITCH/WARNING LIGHT LOCATION IN ROOM.
- SEE ELECTRICAL LEGEND FOR WIRE SIZES TO BE USED IN CONDUITS.
- MAXIMUM 25 WATT INCANDESCENT BULBS RECOMMENDED FOR WARNING LIGHT.

CFCI — DOOR SWITCH / WARNING LIGHT DETAIL — NO SCALE

- LONG SIDE OF GROMMETED OPENING SHOULD BE PERPENDICULAR TO TROUGH RUN
- FOR EXACT SIZE OF COVERS AND OPENINGS, SEE 'JUNCTION BOX AND COVERPLATE DESCRIPTIONS.'
- CONTRACTOR SHALL SPLIT COVERS, CUT OPENINGS AND PROVIDE GROMMETS AS INDICATED OR PURCHASE THESE ITEMS FROM SUPPLIER.

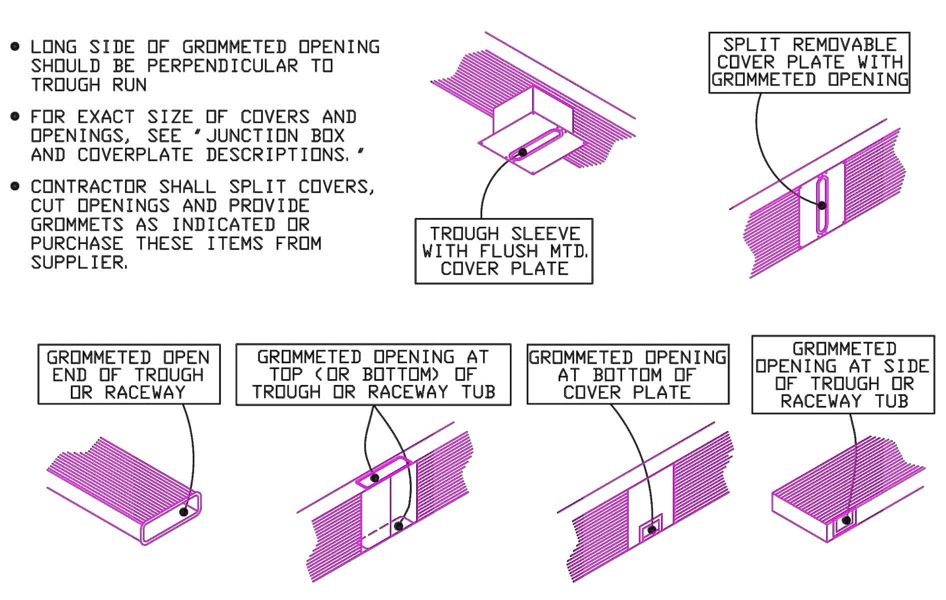

CFCI — TROUGH / RACEWAY COVER PLATE & OPENING DETAILS — NO SCALE

SEALTITE CONNECTION FROM 'J':

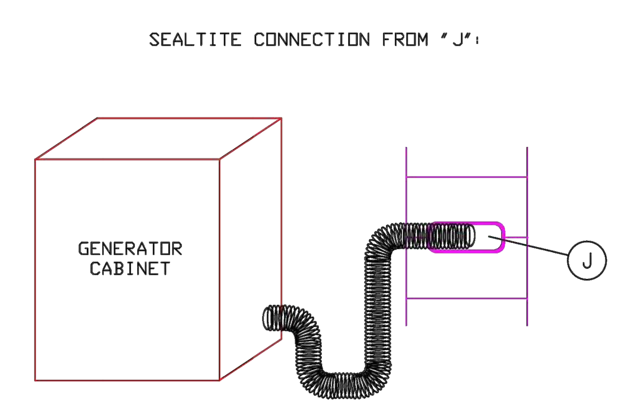

CFCI — TYPICAL X-RAY GENERATOR CABINET CONNECTION DETAIL — NO SCALE

CUSTOMER: Executive ER Urgent Care Northridge, CA
Electrical Details

THESE DRAWINGS ARE SUBMITTED TO SUGGEST LOCATION OF ALL DIAGNOSTIC IMAGING EQUIPMENT AND ASSOCIATED APPARATUS, ELECTRICAL WIRING DETAILS, AND ROOM ARRANGEMENTS. IN PREPARING THIS DRAWING, EVERY EFFORT HAS BEEN MADE TO CONFORM DETAILS TO THE ACTUAL EQUIPMENT EXPECTED TO BE INSTALLED. HOWEVER, THESE DRAWINGS ARE NOT TO BE USED FOR ACTUAL CONSTRUCTION PURPOSES, AND THE PREPARER CANNOT ACCEPT ANY RESPONSIBILITY FOR DAMAGES RESULTING THEREFROM. CONSTRUCTION DRAWINGS TO BE PREPARED BY PURCHASER'S ARCHITECT OR CONTRACTOR.

PDES
Preferred Diagnostic Equipment Service, Inc.
1241 Carbide Drive
Corona, CA 92881
(800) 340-0760

DRAWN BY: J. EVANS
DATE: 12/10/14
DWG. NO. 14343
SHEET: E2

Klassen corporation
Architecture Construction
2021 Westwind Drive
Bakersfield, CA 93301
(661) 324-3000
(661) 324-3900 Fax
www.klassencorp.com

REGISTERED PROFESSIONAL ENGINEER KAREN A. MARTINEZ E 18218 ELECTRICAL STATE OF CALIFORNIA

The above drawings and specifications and ideas, designs and arrangements represented thereby are and shall remain the property of the architect: and no part thereof shall be copied, disclosed to others or used in connection with any work or project other than the specific project for which they have been prepared and developed without the written consent of the architect. Visual contact with these drawings or specifications shall constitute conclusive evidence of acceptance of these restrictions.

Written dimensions on these drawings shall have precedence over scaled dimension: contractors shall verify and be responsible for, all dimensions and conditions on the job and this office must be notified of any variations from the dimensions and conditions shown by these drawings. Shop details must be submitted to this office for approval before proceeding with fabrication.

TENANT IMPROVEMENTS
SAN JOAQUIN VALLEY PULMONARY
5801 TRUXTUN AVE, BAKERSFIELD CA 933309

DATE	ISSUED FOR	MARK
07/01/19	OWNER SD SUBMITTAL	
07/31/19	OWNER DD SUBMITTAL	
08/15/19	OWNER CD SUBMITTAL	

Project No.: C19-148

PDES PLAN

E8.0

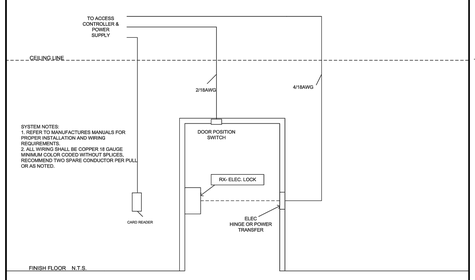

JRS BUILDERS HARDWARE CONSULTING INC.
DATE 08/01/19

PROJECT NAME: TI SAN JAOQUIN VALLEY PULMONARY
DOOR #S: 200, 205, 110, 115,

1 DOOR CONTROL N.T.S.

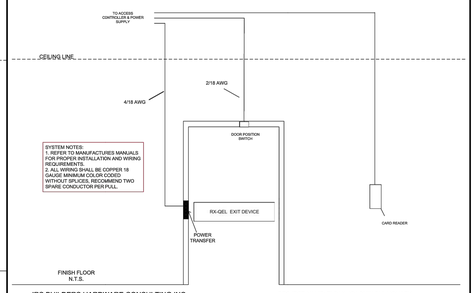

JRS BUILDERS HARDWARE CONSULTING INC.
DATE 8/01/19

PROJECT NAME: TI SAN JOAQUIN PULMONARY
Door #s 114

2 DOOR CONTROL N.T.S.

3 N.T.S.

4 N.T.S.

5

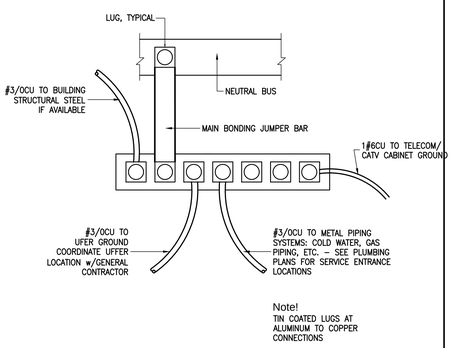

6 BONDING DETAIL N.T.S.

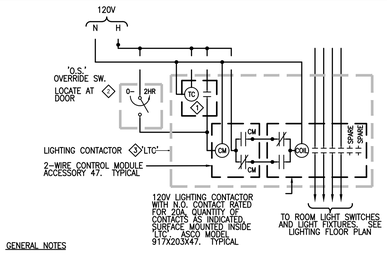

GENERAL NOTES

1. LIGHTING CONTROL SEQUENCE OF OPERATION:
   a. TIME CLOCK TO TURN ALL INTERIOR LIGHT FIXTURES ON AND OFF AT THE DAILY PRESET SCHEDULE.
   b. OVERRIDE SWITCH TO TURN ON LIGHT FIXTURES AFTER TIME CLOCK SCHEDULED OFF FOR MAXIMUM 2 HOURS.
2. ALL LIGHTING CONTROL EQUIPMENT/DEVICES SHALL BE CERTIFIED. ALL CONTROL WIRING SHALL COMPLY WITH CEC REQUIREMENTS; THE SYSTEM SHALL BE INSTALLED AS DIRECTED BY THE MANUFACTURER.

NOTES

1. ASTRONOMICAL TIME CLOCK WITH MULTIPLE CHANNELS, 7–DAY TIME SWITCH, 365 DAY ADVANCE SCHEDULING WITH HOLIDAY CAPABILITY, AUTOMATIC LEAP YEAR COMPENSATION, POWER FAILURE MEMORY, AND 72–HOUR BATTERY BACKUP.
2. 0–2 HOUR INTERVAL TIMER.
3. LIGHTING TERMINAL CABINET

7 ASTRONOMICAL TIMECLOCK DIAGRAM N.T.S.

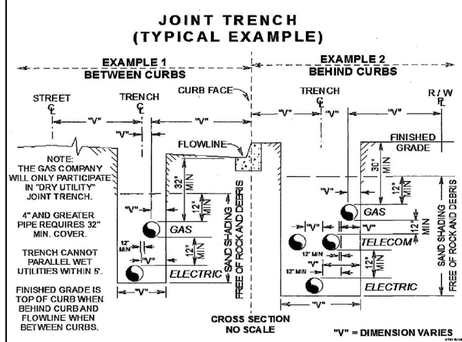

8 JOINT TRENCH N.T.S.

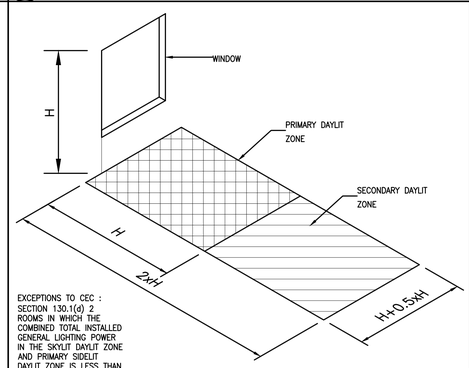

EXCEPTIONS TO CEC :
SECTION 130.1(d) 2
ROOMS IN WHICH THE COMBINED TOTAL INSTALLED GENERAL LIGHTING POWER IN THE SKYLIT DAYLIT ZONE AND PRIMARY SIDELIT DAYLIT ZONE IS LESS THAN 120WATTS.

SECTION 130.1(d)2:
ROOMS THAT HAVE A TOTAL GLAZING AREA OF LESS THAN 24 SQFT.

9 AUTOMATIC DAYLIGHTING CONTROL N.T.S.

10

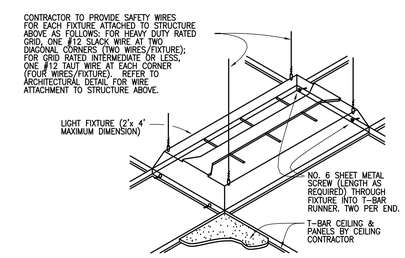

11 RECESSED FIXTURE MOUNTING

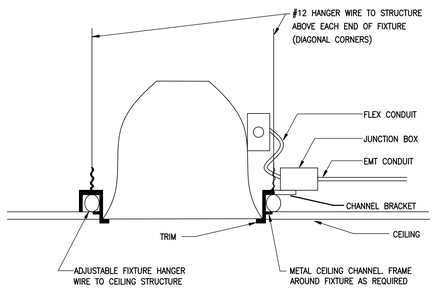

12 FLUSH FIXTURE MOUNTING

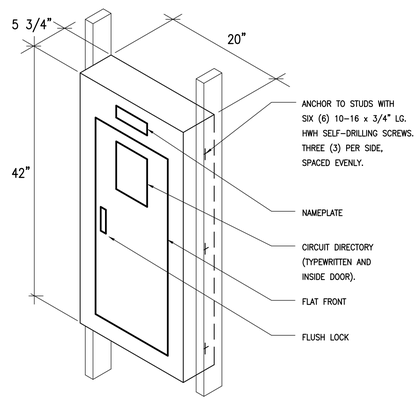

13 RECESSED MOUNTED PANEL

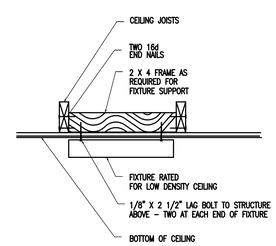

14 SURFACE FIXTURE MOUNTING N.T.S.

15

16

17

18

19

20

Klassen corporation
Architecture Construction
2021 Westwind Drive
Bakersfield, CA 93301
(661) 324-3000
(661) 324-3900 Fax
www.klassencorp.com

REGISTERED PROFESSIONAL ENGINEER
KAREN MCDONALD
E 18218
ELECTRICAL
STATE OF CALIFORNIA

The above drawings and specifications and ideas, designs and arrangements represented thereby are and shall remain the property of the architect and no part thereof shall be copied, disclosed to others or used in connection with any work or project other than the specific project for which they have been prepared and developed without the written consent of the architect. Visual contact with these drawings or specifications shall constitute conclusive evidence of acceptance of these restrictions.

Written dimensions on these drawings shall have precedence over scaled dimension. contractors shall verify and be responsible for, all dimensions and conditions on the job and this office must be notified of any variation from the dimensions and conditions shown by these drawings. Shop details must be submitted to this office for approval before proceeding with fabrication.

TENANT IMPROVEMENTS
SAN JOAQUIN VALLEY PULMONARY
5801 TRUXTUN AVE, BAKERSFIELD CA 933309

MARK	ISSUED FOR	DATE
	OWNER SD SUBMITTAL	07/01/19
	OWNER DD SUBMITTAL	07/31/19
	OWNER CD SUBMITTAL	08/15/19

Project No. : C19-148

ELECTRICAL DETAILS

E9.0

Project Name:	SAN JOAQUIN PULMONARY	NRCC-PRF-01-E	Page 2 of 22
Project Address:		Calculation Date/Time:	22:38, Sun, Aug 11, 2019
Compliance Scope:	NewComplete	Input File Name:	c19-148.cibd16x

C. PRIORITY PLAN CHECK/ INSPECTION ITEMS (in order of highest to lowest TDV energy savings)

1st	Indoor Fans: Check envelope and mechanical
2nd	Indoor Lighting: Check lighting
3rd	Heat Rejection: Check envelope and mechanical
4th	Pumps & Misc.: Check mechanical
5th	Domestic Hot Water: Check mechanical
6th	Space Heating: Check envelope and mechanical
7th	Space Cooling: Check envelope and mechanical

Compliance Margin By Energy Component (from Table B column 4)

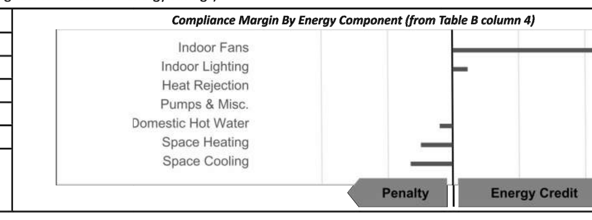

D. EXCEPTIONAL CONDITIONS

This project uses the Simplified Geometry Performance Modeling Approach which is not capable of modeling daylighting controls and assumes the prescriptive Secondary Daylit Control requirements are met. PRESCRIPTIVE COMPLIANCE documentation (form NRCC-LTI-02-E) for the requirements of section 140.6(d) Automatic Daylighting Controls in Secondary Daylit Zones is required.

This project includes Domestic Hot Water in the analysis. Please verify that Domestic Hot Water is included in the design for the permitted scope of work.

E. HERS VERIFICATION

This Section Does Not Apply

F. ADDITIONAL REMARKS

None Provided

Project Name:	SAN JOAQUIN PULMONARY	NRCC-PRF-01-E	Page 1 of 22
Project Address:		Calculation Date/Time:	22:38, Sun, Aug 11, 2019
Compliance Scope:	NewComplete	Input File Name:	c19-148.cibd16x

A. PROJECT GENERAL INFORMATION

1.	Project Location (city)	- specify -	8.	Standards Version	Compliance2016
2.	CA Zip Code		9.	Compliance Software (version)	EnergyPro 7.2
3.	Climate Zone	13	10.	Weather File	BAKERSFIELD_723840_CZ2010.epw
4.	Total Conditioned Floor Area in Scope	6,695 ft²	11.	Building Orientation (deg)	(N) 0 deg
5.	Total Unconditioned Floor Area	0 ft²	12.	Permitted Scope of Work	NewComplete
6.	Total # of Stories (Habitable Above Grade)	1	13	Building Type(s)	Nonresidential
7.	Total # of dwelling units	0	14	Gas Type	NaturalGas

B. COMPLIANCE RESULTS FOR PERFORMANCE COMPONENTS (Annual TDV Energy Use, kBtu/ft ²-yr) § 140.1

BUILDING COMPLIES

1. Energy Component	2. Standard Design (TDV)	3. Proposed Design (TDV)	4. Compliance Margin (TDV)	5. Percent Better than Standard
Space Heating	8.65	19.23	-10.58	-122.3%
Space Cooling	97.28	111.19	-13.91	-14.3%
Indoor Fans	100.76	37.51	63.25	62.8%
Heat Rejection	--	--	--	--
Pumps & Misc.	--	--	--	--
Domestic Hot Water	2.96	7.40	-4.44	-150.0%
Indoor Lighting	41.60	37.04	4.56	11.0%
COMPLIANCE TOTAL	**251.25**	**212.37**	**38.88**	**15.5%**
Receptacle	107.64	107.64	0.0	0.0%
Process	--	--	--	--
Other Ltg	--	--	--	--
Process Motors	--	--	--	--
TOTAL	**358.89**	**320.01**	**38.9**	**10.8%**

Project Name:	SAN JOAQUIN PULMONARY	NRCC-PRF-01-E	Page 3 of 22
Project Address:		Calculation Date/Time:	22:38, Sun, Aug 11, 2019
Compliance Scope:	NewComplete	Input File Name:	c19-148.cibd16x

G. COMPLIANCE PATH & CERTIFICATE OF COMPLIANCE SUMMARY

Identify which building components use the performance or prescriptive path for compliance. "NA"= not in project

For components that utilize the performance path, indicate the sheet number that includes mandatory notes on plans.

Building Component		Compliance Path	Compliance Forms *(required for submittal)*	Location of Mandatory Notes on Plans
Envelope	☒	Performance	NRCC-PRF-ENV-DETAILS (section of the NRCC-PRF-01-E)	
	☐	Prescriptive	NRCC-ENV-01 / 02 / 03 / 04 / 05 / 06-E	
	☐	NA		
Mechanical	☒	Performance	NRCC-PRF-MCH-DETAILS (section of the NRCC-PRF-01-E)	
	☐	Prescriptive	NRCC-MCH-01 / 02 / 03 / 04 / 05 / 06 / 07-E	
	☐	NA		
Domestic Hot Water	☒	Performance	NRCC-PRF-PLB-DETAILS (section of the NRCC-PRF-01-E)	
	☐	Prescriptive	NRCC-PLB-01-E	
	☐	NA		
Lighting (Indoor Conditioned)	☒	Performance	NRCC-PRF-LTI-DETAILS (section of the NRCC-PRF-01-E)	
	☐	Prescriptive	NRCC-LTI-01 / 02 / 03 / 04 / 05-E	
	☐	NA		
Covered Process: Commercial Kitchens	☐	Performance	S2 (section of the NRCC-PRF-01-E)	
	☐	Prescriptive	NRCC-PRC-01/ 03-E	
	☒	NA		
Covered Process: Computer Rooms	☐	Performance	S3 (section of the NRCC-PRF-01-E)	
	☐	Prescriptive	NRCC-PRC-01/ 04-E	
	☒	NA		
Covered Process: Laboratory Exhaust	☐	Performance	S4 (section of the NRCC-PRF-01-E)	
	☐	Prescriptive	NRCC-PRC-01/ 09-E	
	☒	NA		

Project Name:	SAN JOAQUIN PULMONARY	NRCC-PRF-01-E	Page 4 of 22
Project Address:		Calculation Date/Time:	22:38, Sun, Aug 11, 2019
Compliance Scope:	NewComplete	Input File Name:	c19-148.cibd16x

G. COMPLIANCE PATH & CERTIFICATE OF COMPLIANCE SUMMARY

The following building components are only eligible for prescriptive compliance. Indicate which are relevant to the project.				*The following building components may have mandatory requirements per Part 6. Indicate which are relevant to the project.*			
Yes	NA	Prescriptive Requirement	Compliance Forms	Yes	NA	Mandatory Requirement	Compliance Forms
☐	☒	Lighting (Indoor Unconditioned) §140.6	NRCC-LTI-01 / 02 / 03 / 04 / 05-E	☐ ☐	☒ ☒	Commissioning: §120.8 Simple Systems Complex Systems	NRCC-CXR-01 / 02 / 03 / 05-E NRCC-CXR-01 / 02 / 04 / 05-E
☐	☒	Lighting (Outdoor) §140.7	NRCC-LTO-01 / 02 / 03-E	☐	☒	Electrical: §130.5	NRCC-ELC-01-E
☐	☒	Lighting (Sign) §140.8	NRCC-LTS-01-E	☐	☒	Solar Ready: §110.10	NRCC-SRA-01 / 02-E
☐	☒	Solar Thermal Water Heating: §140.5	NRCC-STH-01-E	☐ ☐ ☐ ☐ ☐ ☐	☒ ☒ ☒ ☒ ☒ ☒	Covered Process: §120.6 Parking Garage Commercial Refrigeration Warehouse Refrigeration Compressed Air Process Boilers	NRCC-PRC-01-E NRCC-PRC-02-E NRCC-PRC-05-E NRCC-PRC-06/07/08-E NRCC-PRC-10-E NRCC-PRC-11-E

Project Name:	SAN JOAQUIN PULMONARY	NRCC-PRF-01-E	Page 5 of 22
Project Address:		Calculation Date/Time:	22:38, Sun, Aug 11, 2019
Compliance Scope:	NewComplete	Input File Name:	c19-148.cibd16x

H. CERTIFICATE OF INSTALLATION, CERTIFICATE OF ACCEPTANCE & CERTIFICATE OF VERIFICATION SUMMARY (NRCI/NRCA/NRCV) – Documentation Author to indicate which Certificates must be submitted for the features to be recognized for compliance (Retain copies and verify forms are completed and signed to post in field for Field Inspector to verify). See Tables G. and H. in MCH and LTI Details Sections for Acceptance Tests and forms by equipment. — Confirmed

Building Component	Compliance Forms *(required for submittal)*	Pass	Fail
Envelope	☒ NRCI-ENV-01-E - For all buildings	☐	☐
	☒ NRCA-ENV-02-F- NFRC label verification for fenestration	☐	☐
Mechanical	☒ NRCI-MCH-01-E - For all buildings with Mechanical Systems	☐	☐
	☒ NRCA-MCH-02-A- Outdoor Air	☐	☐
	☒ NRCA-MCH-03-A – Constant Volume Single Zone HVAC	☐	☐
	☐ NRCA-MCH-04-H- Air Distribution Duct Leakage	☐	☐
	☐ NRCA-MCH-05-A- Air Economizer Controls	☐	☐
	☐ NRCA-MCH-06-A- Demand Control Ventilation	☐	☐
	☐ NRCA-MCH-07-A – Supply Fan Variable Flow Controls	☐	☐
	☐ NRCA-MCH-08-A- Valve Leakage Test	☐	☐
	☐ NRCA-MCH-09-A – Supply Water Temp Reset Controls	☐	☐
	☐ NRCA-MCH-10-A- Hydronic System Variable Flow Controls	☐	☐
	☐ NRCA-MCH-11-A – Auto Demand Shed Controls	☐	☐
	☐ NRCA-MCH-12-A- Packaged Direct Expansion Units	☐	☐
	☐ NRCA-MCH-13-A- Air Handling Units and Zone Terminal Units	☐	☐
	☐ NRCA-MCH-14-A- Distributed Energy Storage	☐	☐
	☐ NRCA-MCH-15-A – Thermal Energy Storage	☐	☐
	☐ NRCA-MCH-16-A- Supply Air Temp Reset Controls	☐	☐
	☐ NRCA-MCH-17-A – Condensate Water Temp Reset Controls	☐	☐
	☐ NRCA-MCH-18-A- Energy Management Controls Systems	☐	☐
	☐ NRCV-MCH-04-H- Duct Leakage Test	☐	☐

Project Name:	SAN JOAQUIN PULMONARY	NRCC-PRF-01-E	Page 6 of 22
Project Address:		Calculation Date/Time:	22:38, Sun, Aug 11, 2019
Compliance Scope:	NewComplete	Input File Name:	c19-148.cibd16x

H. CERTIFICATE OF INSTALLATION, CERTIFICATE OF ACCEPTANCE & CERTIFICATE OF VERIFICATION SUMMARY (NRCI/NRCA/NRCV) – Documentation Author to indicate which Certificates must be submitted for the features to be recognized for compliance (Retain copies and verify forms are completed and signed to post in field for Field Inspector to verify). See Tables G. and H. in MCH and LTI Details Sections for Acceptance Tests and forms by equipment. — Confirmed

Building Component	Compliance Forms *(required for submittal)*	Pass	Fail
Plumbing	☒ NRCI-PLB-01-E - For all buildings with Plumbing Systems	☐	☐
	☐ NRCI-PLB-02-E - required on central systems in high-rise residential, hotel/motel application.	☐	☐
	☐ NRCI-PLB-03-E - Single dwelling unit systems in high-rise residential, hotel/motel application.	☐	☐
	☐ NRCI-PLB-21-E - HERS verified central systems in high-rise residential, hotel/motel application.	☐	☐
	☐ NRCI-PLB-22-E - HERS verified single dwelling unit systems in high-rise residential, hotel/motel application.	☐	☐
	☐ NRCV-PLB-21-H- HERS verified central systems in high-rise residential, hotel/motel application.	☐	☐
	☐ NRCV-PLB-22-H - HERS verified single dwelling unit systems in high-rise residential, hotel/motel application.	☐	☐
	☐ NRCI-STH-01-E - Any solar water heating	☐	☐
Indoor Lighting	☒ NRCI-LTI-01-E - For all buildings	☐	☐
	☐ NRCI-LTI-02-E - Lighting control system, or for an Energy Management Control System (EMCS)	☐	☐
	☐ NRCI-LTI-03-E - Line-voltage track lighting integral current limiter, or for a supplementary overcurrent protection panel used to energize only line-voltage track lighting	☐	☐
	☐ NRCI-LTI-04-E - Two interlocked systems serving an auditorium, a convention center, a conference room, or a theater	☐	☐
	☐ NRCI-LTI-05-E - Lighting Control Credit Power Adjustment Factor (PAF)	☐	☐
	☐ NRCI-LTI-06-E - Additional wattage installed in a video conferencing studio	☐	☐
	☒ NRCA-LTI-02-A - Occupancy sensors and automatic time switch controls.	☐	☐
	☒ NRCA-LTI-03-A - Automatic daylighting controls	☐	☐
	☐ NRCA-LTI-04-A - Demand responsive lighting controls	☐	☐
Outdoor Lighting	☐ NRCI-LTO-01-E – Outdoor Lighting	☐	☐
	☐ NRCI-LTO-02-E- EMCS Lighting Control System	☐	☐
	☐ NRCA-LTO-02-A - Outdoor Lighting Control	☐	☐
Sign Lighting	☐ NRCI-LTS-01-E – Sign Lighting	☐	☐
Electrical	☐ NRCI-ELC-01-E - Electrical Power Distribution	☐	☐
Photovoltaic	☐ NRCI-SPV-01-E Photovoltaic Systems	☐	☐

Project Name:	SAN JOAQUIN PULMONARY	NRCC-PRF-01-E	Page 7 of 22
Project Address:		Calculation Date/Time:	22:38, Sun, Aug 11, 2019
Compliance Scope:	NewComplete	Input File Name:	c19-148.cibd16x

H. CERTIFICATE OF INSTALLATION, CERTIFICATE OF ACCEPTANCE & CERTIFICATE OF VERIFICATION SUMMARY (NRCI/NRCA/NRCV) – Documentation Author to indicate which Certificates must be submitted for the features to be recognized for compliance (Retain copies and verify forms are completed and signed to post in field for Field Inspector to verify). See Tables G. and H. in MCH and LTI Details Sections for Acceptance Tests and forms by equipment. — Confirmed

Building Component	Compliance Forms *(required for submittal)*	Pass	Fail
Covered Process	☐ NRCI-PRC-01-E Covered Processes	☐	☐
	☐ NRCA-PRC-01-F- Compressed Air Systems	☐	☐
	☐ NRCA-PRC-02-F- Kitchen Exhaust	☐	☐
	☐ NRCA-PRC-03-F- Garage Exhaust	☐	☐
	☐ NRCA-PRC-04-F- Refrigerated Warehouse- Evaporator Fan Motor Controls	☐	☐
	☐ NRCA-PRC-05-F- Refrigerated Warehouse- Evaporative Condenser Controls	☐	☐
	☐ NRCA-PRC-06-F- Refrigerated Warehouse- Air Cooled Condenser Controls	☐	☐
	☐ NRCA-PRC-07F- Refrigerated Warehouse- Variable Speed Compressor	☐	☐
	☐ NRCA-PRC-08-F- Electrical Resistance Underslab Heating System	☐	☐

I. ENVELOPE GENERAL INFORMATION (See NRCC-PRF-ENV-DETAILS for more information)

						Confirmed	
1.	Total Conditioned Floor Area	6,695 ft²	5.	Number of Floors Above Grade	1	Pass	Fail
2.	Total Unconditioned Floor Area	0 ft²	6.	Number of Floors Below Grade	0		
3.	Addition Conditioned Floor Area	0 ft²					
4.	Addition Unconditioned Floor Area	0 ft²					

7. Opaque Surfaces & Orientation	8. Total Gross Surface Area	9. Total Fenestration Area	10. Window to Wall Ratio	Pass	Fail
North Wall	2,230 ft²	1,590 ft²	71.3%	☐	☐
East Wall	500 ft²	360 ft²	72.0%	☐	☐
South Wall	2,000 ft²	1,750 ft²	87.5%	☐	☐
West Wall	540 ft²	360 ft²	66.7%	☐	☐
Total	**5,270 ft²**	**4,060 ft²**	**77.0%**	☐	☐
Roof	6,695 ft²	0 ft²	00.0%	☐	☐

Project Name:	SAN JOAQUIN PULMONARY	NRCC-PRF-01-E	Page 8 of 22
Project Address:		Calculation Date/Time:	22:38, Sun, Aug 11, 2019
Compliance Scope:	NewComplete	Input File Name:	c19-148.cibd16x

J. FENESTRATION ASSEMBLY SUMMARY § 110.6 — Confirmed

1. Fenestration Assembly Name / Tag or I.D.	2. Fenestration Type / Product Type / Frame Type	3. Certification Method[1]	4. Assembly Method	5. Area ft²	6. Overall U-factor	7. Overall SHGC	8. Overall VT	9. Status[2]	Pass	Fail
Double Metal Clear	VerticalFenestration FixedWindow MetalFraming	Default Performance	SiteBuilt	2310	0.71	0.60	0.77	N	☐	☐
Residential Prescriptive	VerticalFenestration FixedWindow N/A	NFRC Rated	Manufactured	1750	0.32	0.25	0.50	N	☐	☐

[1] Newly installed fenestration shall have a certified NFRC Label Certificate or use the CEC default tables found in Table 110.6-A and Table 110.6-B. Center of Glass (COG) values are for the glass-only, determined by the manufacturer, and are shown for ease of verification. Site-built fenestration values are calculated per Nonresidential Appendix NA6 and are used in the analysis.

[2] Status: N - New, A – Altered, E – Existing

Taking compliance credit for fenestration shading devices? (if "Yes", see NRCC-PRF-ENV-DETAILS for more information)	No

K. OPAQUE SURFACE ASSEMBLY SUMMARY § 120.7/ § 140.3 — Confirmed

1. Surface Name	2. Surface Type	3. Area (ft²)	4. Framing Type	5. Cavity R-Value	6. Continuous R-Value	7. U-Factor / F-Factor / C-Factor	8. Status[1]	Pass	Fail
R-19 Wall9	ExteriorWall	5270	Wood	19	NA	U-Factor: 0.072	N	☐	☐
Slab On Grade18	UndergroundFloor	6695	NA	0	NA	F-Factor: 0.730	N	☐	☐
R-30 Roof Attic20	Roof	6695	Wood	30	NA	U-Factor: 0.038	N	☐	☐

[1] Status: N - New, A – Altered, E – Existing

L. ROOFING PRODUCT SUMMARY § 140.3 — Confirmed

1. Product Type	2. Product Density (lb/ft²)	3. Aged Solar Reflectance	4. Thermal Emittance	5. SRI	6. Cool Roof Credit	7. Roofing Product Description	Pass	Fail
R-30 Roof Attic20	5.895	0.08	0.75	NA	No	NA	☐	☐

Project Name:	SAN JOAQUIN PULMONARY	NRCC-PRF-01-E	Page 9 of 22
Project Address:		Calculation Date/Time:	22:38, Sun, Aug 11, 2019
Compliance Scope:	NewComplete	Input File Name:	c19-148.cibd16x

M. HVAC SYSTEM SUMMARY (see NRCC-PRF-MCH-DETAILS for more information) § 110.1 / § 110.2

Dry System Equipment [1] (Fan & Economizer info included below in Table N) — Confirmed

1. Equip Name	2. Equip Type	3. System Type (Simple [2] or Complex [3])	4. Qty	5. Total Heating Output (kBtu/h)	6. Supp Heat Source (Y/N)	7. Supp Heat Output (kBtuh)	8. Total Cooling Output (kBtu/h)	9. Efficiency Cooling	9. Efficiency Heating	10. Acceptance Testing Required? (Y/N) [4]	11. Status[5]	Pass	Fail
5 TON RTU AC.17	SZAC (Packaged3Phase)	Simple	2	80	No	0	58	SEER-14.00 / EER-12.20	AFUE-82.0	No	N	☐	☐
3 TON RTU AC.56810	SZAC (Packaged3Phase)	Simple	4	80	No	0	35	SEER-14.00 / EER-12.20	AFUE-82.0	Yes	N	☐	☐
7.5 TON RTU AC.234	SZAC (Packaged3Phase)	Simple	1	100	No	0	86	EER-12.2	AFUE-82.0	Yes	N	☐	☐
3 RTU	SZAC (Packaged3Phase)	Simple	1	80	No	0	35	SEER-14.00 / EER-12.20	AFUE-82.0	Yes	N	☐	☐
IT ROOM MINI SPLIT	SZHP (CRAC)	Simple	1	9	No	0	9	SEER-14.00 / EER-12.50	HSPF-14.00	Yes	N	☐	☐

[1] Dry System Equipment includes furnaces, air handling units, heat pumps, etc.
[2] Simple Systems must complete NRCC-CXR-03-E commissioning design review form
[3] Complex Systems must complete NRCC-CXR-04-E commissioning design review form
[4] A summary of which acceptance tests are applicable is provided in NRCC-PRF-MCH-DETAILS
[5] Status: N - New, A – Altered, E – Existing

Wet System Equipment [1] / *Pumps* — Confirmed

12. Equip Name	13. Equip Type	14. Qty	15. Vol (gal)	16. Rated Capacity (kBtu/h)	17. Efficiency	18. Standby Loss	19. Tank Ext. R Value	20. Qty	21. GPM	22. HP	23. VSD (Y/N)	24. Status[2]	Pass	Fail
50 Gallon Electric2	Storage	1	50.00	15	EF: 0.93	SBLF: NA	NA		NA		No	N	☐	☐

[1] Wet System Equipment includes boilers, chillers, cooling towers, water heaters, etc.
[2] Status: N - New, A – Altered, E – Existing

Discrepancy between modeled and designed equipment sizing? (If "Yes", see Table F. "Additional Remarks" for an explanation)	No

Project Name:	SAN JOAQUIN PULMONARY	NRCC-PRF-01-E	Page 10 of 22
Project Address:		Calculation Date/Time:	22:38, Sun, Aug 11, 2019
Compliance Scope:	NewComplete	Input File Name:	c19-148.cibd16x

N. ECONOMIZER & FAN SYSTEMS SUMMARY[1] § 140.4 — Confirmed

1. Equip Name	2. Outside Air CFM	3. Supply Fan CFM	HP	BHP	TSP (inch WC)	Control	4. Return Fan CFM	HP	BHP	TSP (inch WC)	Control	5. Economizer Type (if present)	Pass	Fail
5 TON RTU AC.17	171	2000	0.260	0.260	0.49	ConstantVolume	NA	NA	NA	NA	NA	NoEconomizer	☐	☐
3 TON RTU AC.56810	84	1200	0.200	0.200	0.53	ConstantVolume	NA	NA	NA	NA	NA	NoEconomizer	☐	☐
7.5 TON RTU AC.234	182	3000	0.310	0.310	0.39	ConstantVolume	NA	NA	NA	NA	NA	NoEconomizer	☐	☐
3 RTU	135	1200	0.200	0.200	0.53	ConstantVolume	NA	NA	NA	NA	NA	NoEconomizer	☐	☐
IT ROOM MINI SPLIT	10	300	0.180	0.180	1.90	ConstantVolume	NA	NA	NA	NA	NA	NoEconomizer	☐	☐

[1] Mechanical ventilation calculations and exhaust fans are included in the NRCC-PRF-MCH-DETAILS section

O. EQUIPMENT CONTROLS § 120.2 — Confirmed

1. Equip Name	2. Equip Type	3. Controls	Pass	Fail
5 TON RTU AC.17	SZAC	No DCV Controls No Economizer No Supply Air Temp. Control No Optimum Start No Evaporative Cooler No Heat Recovery	☐	☐
3 TON RTU AC.56810	SZAC	No DCV Controls No Economizer No Supply Air Temp. Control No Optimum Start No Evaporative Cooler No Heat Recovery	☐	☐

Project Name:	SAN JOAQUIN PULMONARY	NRCC-PRF-01-E	Page 11 of 22
Project Address:		Calculation Date/Time:	22:38, Sun, Aug 11, 2019
Compliance Scope:	NewComplete	Input File Name:	c19-148.cibd16x

O. EQUIPMENT CONTROLS § 120.2 — Confirmed

1. Equip Name	2. Equip Type	3. Controls	Pass	Fail
7.5 TON RTU AC.234	SZAC	No DCV Controls No Economizer No Supply Air Temp. Control No Optimum Start No Evaporative Cooler No Heat Recovery	☐	☐
3 RTU	SZAC	No DCV Controls No Economizer No Supply Air Temp. Control No Optimum Start No Evaporative Cooler No Heat Recovery	☐	☐
IT ROOM MINI SPLIT	SZHP	No DCV Controls No Economizer No Supply Air Temp. Control No Optimum Start No Evaporative Cooler No Heat Recovery	☐	☐
Plant1 - SHW	Service Hot Water, Primary Only	Fixed Temperature Control, No DDC No Heat Recovery	☐	☐

Project Name:	SAN JOAQUIN PULMONARY	NRCC-PRF-01-E	Page 12 of 22
Project Address:		Calculation Date/Time:	22:38, Sun, Aug 11, 2019
Compliance Scope:	NewComplete	Input File Name:	c19-148.cibd16x

P. SYSTEM DISTRIBUTION SUMMARY § 120.4/ § 140.4(l)

Dry System Distribution — Confirmed

1. Equip Name	2. Equip Type	3. Duct Leakage and Sealing Required per 140.4(l)	4. Duct Leakage will be verified per NA1 and NA2	5. Ducts Insulation R-Value	5. Ducts Location	6. Status[1]	Pass	Fail
5 TON RTU AC.17	SZAC	No	No	8	Unconditioned	N	☐	☐
3 TON RTU AC.56810	SZAC	No	No	8	Unconditioned	N	☐	☐
7.5 TON RTU AC.234	SZAC	No	No	8	Unconditioned	N	☐	☐
3 RTU	SZAC	No	No	8	Unconditioned	N	☐	☐
IT ROOM MINI SPLIT	SZHP	No	No	8	Unconditioned	N	☐	☐

[1] Status: N - New, E – Existing

Does the Project Include Zonal Systems? (If "Yes", see NRCC-PRF-MCH-DETAILS for system information)	No
Does the Project Include a Solar Hot Water System? (If "Yes", see NRCC-PRF-MCH-DETAILS for system information)	No
Multifamily or Hotel/ Motel Occupancy? (If "Yes", see NRCC-PRF-MCH-DETAILS for DHW system information)	No

Q. INDOOR CONDITIONED LIGHTING GENERAL INFO (see NRCC-PRF-LTI-DETAILS for more info)[3] § 140.6 — Confirmed

1. Occupancy Type [1]	2. Conditioned Floor Area [2] (ft²)	3. Installed Lighting Power (Watts)	4. Lighting Control Credits (Watts)	5. Additional (Custom) Allowance: Area Category Footnotes (Watts)	5. Additional (Custom) Allowance: Tailored Method (Watts)	Pass	Fail
						☐	☐
Office (Greater than 250 square feet in floor area)	6,695	4,470	0	0	0	☐	☐
Building Totals:	**6,695**	**4,470**	**0**	**0**	**0**		

[1] See Table 140.6-C
[2] See NRCC-LTI-01-E for unconditioned spaces
[3] Lighting information for existing spaces modeled is not included in the table

Project Name:	SAN JOAQUIN PULMONARY	NRCC-PRF-01-E	Page 13 of 22
Project Address:		Calculation Date/Time:	22:38, Sun, Aug 11, 2019
Compliance Scope:	NewComplete	Input File Name:	c19-148.cibd16x

R. INDOOR CONDITIONED LIGHTING SCHEDULE (Adapted from NRCC-LTI-01-E)[1] § 130.0

Luminaire Schedule (includes all permanent installed lighting in conditioned space, and portable lighting over 0.3 w/ft² in offices) — Installed Watts (Conditioned) — Confirmed

Name or Item Tag	Complete Luminaire Description (i.e., 3-lamp fluorescent troffer, F32T8, one dimmable electronic ballast)	Watts per luminaire	How Wattage is Determined: CEC Default from NA8	How Wattage is Determined: According to §130.0(c)	Total Number Luminaires	Installed Watts	Pass	Fail
EXISTING	EXISTING	48	No	Yes	1	48	☐	☐
F1	F1	48	No	Yes	48	2,304	☐	☐
F3	F3	32	No	Yes	12	384	☐	☐
F4	F4	16	No	Yes	1	16	☐	☐
F5	F5	11	No	Yes	3	32	☐	☐
F6	F6	47	No	Yes	20	940	☐	☐
F7	F7	35	No	Yes	2	69	☐	☐

[1] If lighting power densities were used in the compliance model Building Departments will need to check prescriptive forms for Luminaire Schedule details.

S1. COVERED PROCESS SUMMARY – ENCLOSED PARKING GARAGES § 140.9

This Section Does Not Apply

S2. COVERED PROCESS SUMMARY – COMMERCIAL KITCHENS § 140.9

This Section Does Not Apply

S3. COVERED PROCESS SUMMARY – COMPUTER ROOMS § 140.9

Computer Room System Name	Cooling Capacity (tons)	Economizer Type	Fan Power (watts)	Confirmed Pass	Confirmed Fail
IT ROOM MINI SPLIT	0.8	None	0.16	☐	☐

S4. COVERED PROCESS SUMMARY – LABORATORY EXHAUSTS § 140.9

This Section Does Not Apply

Project Name:	SAN JOAQUIN PULMONARY	NRCC-PRF-01-E	Page 14 of 22
Project Address:		Calculation Date/Time:	22:38, Sun, Aug 11, 2019
Compliance Scope:	NewComplete	Input File Name:	c19-148.cibd16x

T. UNMET LOAD HOURS

This Section Does Not Apply

U. ENERGY USE SUMMARY

Energy Component	Standard Design Site (MWh)	Proposed Design Site (MWh)	Margin (MWh)	Standard Design Site (MBtu)	Proposed Design Site (MBtu)	Margin (MBtu)
Space Heating	--	0.0	--	34.2	76.2	-42.0
Space Cooling	17.0	20.2	-3.2	--	--	--
Indoor Fans	30.5	11.4	19.1	--	--	--
Heat Rejection	--	--	--	--	--	--
Pumps & Misc.	--	--	--	--	--	--
Domestic Hot Water	--	2.1	--	13.9	--	--
Indoor Lighting	11.3	10.1	1.2	--	--	--
COMPLIANCE TOTAL	**58.8**	**43.8**	**15.0**	**48.1**	**76.2**	**-28.1**
Receptacle	28.7	28.7	0.0	--	--	--
Process	--	--	--	--	--	--
Other Ltg	--	--	--	--	--	--
Process Motors	--	--	--	--	--	--
TOTAL	**87.5**	**72.5**	**15.0**	**48.1**	**76.2**	**-28.1**

Project Name:	SAN JOAQUIN PULMONARY	NRCC-PRF-01-E	Page 15 of 22
Project Address:		Calculation Date/Time:	22:38, Sun, Aug 11, 2019
Compliance Scope:	NewComplete	Input File Name:	c19-148.cibd16x

DOCUMENTATION AUTHOR'S DECLARATION STATEMENT § 10-103

I certify that this Certificate of Compliance documentation is accurate and complete.

Documentation Author Name: FRANK CANTELMI	Signature:
Company: Cantelmi engineering, Inc.	
Address: 2130 F STREET	Signature Date:
City/State/Zip: BAKERSFIELD CA	CEA Identification (If applicable): 21190
Phone: 661-324-5252	

RESPONSIBLE PERSON'S DECLARATION STATEMENT

I certify the following under penalty of perjury, under the laws of the State of California:

1. I hereby affirm that I am eligible under the provisions of Division 3 of the Business and Professions Code to sign this document as the person responsible for its preparation; and that I am licensed in the State of California as a civil engineer, mechanical engineer, electrical engineer, or I am a licensed architect.
2. I affirm that I am eligible under the provisions of Division 3 of the Business and Professions Code by section 5537.2 or 6737.3 to sign this document as the person responsible for its preparation; and that I am a licensed contractor performing this work.
3. I affirm that I am eligible under Division 3 of the Business and Professions Code to sign this document because it pertains to a structure or type of work described as exempt pursuant to Business and Professions Code Sections 5537, 5538 and 6737.1.

Responsible Envelope Designer Name: KLASSEN	**Signature:**	
Company: KLASSEN		
Address: 2021 WESTWIND DR	Date Signed:	
City/State/Zip: BAKERSFIELD CA 93301	Declaration Statement Type:	
Phone: 661-324-3000	Title:	License #:
Responsible Lighting Designer Name: FRANK CANTELMI	**Signature:**	
Company: CANTELMI ENG		
Address: 2130 F ST.	Date Signed:	
City/State/Zip: BAKERSFIELD CA	Declaration Statement Type:	
Phone: 6613245252	Title:	License #: 21190
Responsible Mechanical Designer Name: FRANK CANTELMI	**Signature:**	
Company: CANTELMI ENG		
Address: 2130 F ST.	Date Signed:	
City/State/Zip: BAKERSFIELD CA	Declaration Statement Type:	
Phone: 6613245252	Title:	License #: 21190

Project Name:	SAN JOAQUIN PULMONARY	NRCC-PRF-01-E	Page 16 of 22
Project Address:		Calculation Date/Time:	22:38, Sun, Aug 11, 2019
Compliance Scope:	NewComplete	Input File Name:	c19-148.cibd16x

NRCC-PRF-ENV-DETAILS -SECTION START-

A. OPAQUE SURFACE ASSEMBLY DETAILS — Confirmed

1. Surface Name	2. Surface Type	3. Description of Assembly Layers	4. Notes	Pass	Fail
R-19 Wall9	ExteriorWall	Stucco - 7/8 in. Vapor permeable felt - 1/8 in. Wood framed wall, 16in. OC, 5.5in., R-19 Gypsum Board - 1/2 in.		☐	☐
Slab On Grade18	UndergroundFloor	Slab Type = UnheatedSlabOnGrade Insulation Orientation = None Insulation R-Value = R0		☐	☐
R-30 Roof Attic20	Roof	Asphalt shingles - 1/4 in. Vapor permeable felt - 1/8 in. Plywood - 1/2 in. Air - Cavity - Wall Roof Ceiling - 4 in. or more Wood framed roof, 24in. OC, 3.5in., R-30 Gypsum Board - 1/2 in.		☐	☐

B. OVERHANG DETAILS (Adapted from NRCC-ENV-02-E)

This Section Does Not Apply

C. OPAQUE DOOR SUMMARY — Confirmed

1. Opaque Door Assembly Name / Tag or I.D.	2. Door Type	3. Certification Method	4. Operation	5. Area	6. Overall U-factor	7. Status[1]	Pass	Fail
Wood Door16	WoodGreaterThanOrEqualTo1.75inThickDoor	DefaultPerformance	Swinging	24	0.500	N	☐	☐

[1] Status: N - New, A – Altered, E – Existing

Klassen corporation
Architecture Construction
2021 Westwind Drive
Bakersfield, CA 93301
(661) 324-3000
(661) 324-3900 Fax
www.klassencorp.com

The above drawings and specifications and ideas, designs and arrangements represented thereby are and shall remain the property of the architect: and no part thereof shall be copied, disclosed to others or used in connection with any work or project other than the specific project for which they have been prepared and developed without the written consent of the architect. Visual contact with these drawings or specifications shall constitute conclusive evidence of acceptance of these restrictions.

Written dimensions on these drawings shall have precedence over scaled dimension: contractors shall verify and be responsible for, all dimensions and conditions on the job and this office must be notified of any variations from the dimensions and conditions shown by these drawings. Shop details must be submitted to this office for approval before proceeding with fabrication.

TENANT IMPROVEMENTS
SAN JOAQUIN VALLEY PULMONARY
5801 TRUXTUN AVE, BAKERSFIELD CA 933309

MARK	ISSUED FOR	DATE
	OWNER SD SUBMITTAL	07/01/19
	OWNER DD SUBMITTAL	07/31/19
	OWNER CD SUBMITTAL	08/15/19

Project No. : C19-148

TITLE 24

EC-1

Project Name:	SAN JOAQUIN PULMONARY	NRCC-PRF-01-E	Page 17 of 22
Project Address:		Calculation Date/Time:	22:38, Sun, Aug 11, 2019
Compliance Scope:	NewComplete	Input File Name:	c19-148.cibd16x

NRCC-PRF-MCH-DETAILS -SECTION START-

A. MECHANICAL VENTILATION AND REHEAT *(Adapted from 2016-NRCC-MCH-03-E)* — Confirmed

1. DESIGN AIR FLOWS								2. VENTILATION (§ 120.1)													
CONDITIONED ZONE NAME	HEATING/COOLING SYSTEM ID	DESIGN PRIMARY AIR FLOW (CFM)	DESIGN PRIMARY MINIMUM AIR FLOW (CFM)	MINIMUM PRIMARY AIR FLOW FRACTION	MAXIMUM HEATING AIR FLOW (CFM)	MAXIMUM HEATING AIR FLOW FRACTION	DOC CONTROL (Y/N)	VENT SYSTEM ID	CONDITIONED AREA (ft2)	MIN. VENT PER AREA (CFM/ft2)	DESIGN MIN. OP PEOPLE	MIN. VENT PER PEOPLE (CFM/people)	REQ'D VENT AIR FLOW (CFM)	DESIGN VENT AIR FLOW (CFM)	TRANSFER AIRFLOW (CFM)	DCV (Y/N)	Operable Window Interlock § 140.4(c) (Y/N)	Pass	Fail
1-Zone 17	5 TON RTU AC.17	2,000	NA	NA	NA	NA	N	5 TON RTU AC.17	2,279	NA	11.39	30.00	342	342	NA	N	NA	☐	☐
2-Zone AC 56810	3 TON RTU AC.56810	1,200	NA	NA	NA	NA	N	3 TON RTU AC.56810	2,235	NA	11.18	30.00	335	335	NA	N	NA	☐	☐
3-Zone 234	7.5 TON RTU AC.234	3,000	NA	NA	NA	NA	N	7.5 TON RTU AC.234	1,213	NA	6.07	30.00	182	182	NA	N	NA	☐	☐
4-Zone	3 RTU	1,200	NA	NA	NA	NA	N	3 RTU	901	NA	4.50	30.00	135	135	NA	N	NA	☐	☐
5-IT ROOM Zone	IT ROOM MINI SPLIT	300	NA	NA	NA	NA	N	IT ROOM MINI SPLIT	67	NA	0.34	30.00	10	10	NA	N	NA	☐	☐
								TOTAL	6,695		33.48		1,004	1,004	NA			☐	☐

B. ZONAL SYSTEM AND TERMINAL UNIT SUMMARY — § 140.4

1.	2.	3.	4.		5.	6.	7.			8.			Confirmed	
System ID	System Type	Qty	Rated Capacity (kBtuh)		Economizer	Zone Name	Airflow (cfm)			Fan			Pass	Fail
			Heating	Cooling			Design	Min.	Min. Ratio	BHP	Cycles	ECM Motor		
1-Zone 17-Trm	Uncontrolled	2	NA	NA	NA	1-Zone 17	2000	NA	NA	NA	NA	☐	☐	☐
2-Zone AC 56810-Trm	Uncontrolled	4	NA	NA	NA	2-Zone AC 56810	1200	NA	NA	NA	NA	☐	☐	☐
3-Zone 234-Trm	Uncontrolled	1	NA	NA	NA	3-Zone 234	3000	NA	NA	NA	NA	☐	☐	☐

Project Name:	SAN JOAQUIN PULMONARY	NRCC-PRF-01-E	Page 18 of 22
Project Address:		Calculation Date/Time:	22:38, Sun, Aug 11, 2019
Compliance Scope:	NewComplete	Input File Name:	c19-148.cibd16x

B. ZONAL SYSTEM AND TERMINAL UNIT SUMMARY — § 140.4

1.	2.	3.	4.		5.	6.	7.			8.			Confirmed	
System ID	System Type	Qty	Rated Capacity (kBtuh)		Economizer	Zone Name	Airflow (cfm)			Fan			Pass	Fail
			Heating	Cooling			Design	Min.	Min. Ratio	BHP	Cycles	ECM Motor		
4-Zone-Trm	Uncontrolled	1	NA	NA	NA	4-Zone	1200	NA	NA	NA	NA	☐	☐	☐
5-IT ROOM Zone-Trm	Uncontrolled	1	NA	NA	NA	5-IT ROOM Zone	300	NA	NA	NA	NA	☐	☐	☐

C. EXHAUST FAN SUMMARY

This Section Does Not Apply

D. DHW EQUIPMENT SUMMARY – *(Adapted from NRCC-PLB-01)* — § 110.3 — Confirmed

1.	2.	3.		4.	5.	6.	7.	8.	9.	10.	11.	Pass	Fail
DHW Name	Heater Element Type	Tank Type		Qty	Tank Vol (gal)	Rated Input (kBtu/h)	Efficiency	Tank Insulation R-value (inc/Fac)	Standby Loss Fraction	Heat Pump Type	Tank Location or Ambient Condition		
50 Gallon Electric2	Electricity	Storage		1	50.00	15	EF: 0.93	NA	SBLF: NA	NA	NA	☐	☐

E. MULTI-FAMILY CENTRAL DHW SYSTEM DETAILS

This Section Does Not Apply

F. SOLAR HOT WATER HEATING SUMMARY (Adapted from NRCC-STH-01)

This Section Does Not Apply

Project Name:	SAN JOAQUIN PULMONARY	NRCC-PRF-01-E	Page 19 of 22
Project Address:		Calculation Date/Time:	22:38, Sun, Aug 11, 2019
Compliance Scope:	NewComplete	Input File Name:	c19-148.cibd16x

G. MECHANICAL HVAC ACCEPTANCE TESTS & FORMS *(Adapted from 2016-NRCC-MCH-01-E)* — § RA4

Declaration of Required Acceptance Certificates (NRCA) – Acceptance Certificates that may be submitted. (Retain copies and verify forms are completed and signed to post in field for Field Inspector to verify).

Test Description		MCH-02A	MCH-03A	MCH-04A	MCH-05A	MCH-06A	MCH-07A	MCH-08A	MCH-09A	MCH-10A	MCH-11A	MCH-12A	MCH-13A	MCH-14A	MCH-15A	MCH-16A	MCH-17A	MCH-18A	Confirmed	
Equipment Requiring Testing or Verification	# of units	Outdoor Air	Single Zone Unitary	Air Disc. Ducts	Economizer Controls	OCV	Supply Fan VAV	Valve leakage	Supply Water Temp. Reset	Hyd. Variable Flow Control	Auto Demand Shed Control	FDD for DX Units	Auto FDD for Air & Zone	DX Energy Storage DX AC	TES Systems	Supply Air Temp. Reset	Condenser Water Reset Controls	ECM35	Pass	Fail
Plant1 - SHW	1	--	--	--	--	--	--	--	--	--	--	--	--	--	--	--	--	--	☐	☐
5 TON RTU AC.17	2	--	--	--	--	--	--	--	--	--	--	--	--	--	--	--	--	--	☐	☐
3 TON RTU AC.56810	4	X	X	--	--	--	--	--	--	--	--	--	--	--	--	--	--	--	☐	☐
7.5 TON RTU AC.234	1	X	X	--	--	--	--	--	--	--	--	--	--	--	--	--	--	--	☐	☐
3 RTU	1	X	X	--	--	--	--	--	--	--	--	--	--	--	--	--	--	--	☐	☐
IT ROOM MINI SPLIT	1	X	X	--	--	--	--	--	--	--	--	--	--	--	--	--	--	--	☐	☐

H. EVAPORATIVE COOLER SUMMARY

This Section Does Not Apply

Project Name:	SAN JOAQUIN PULMONARY	NRCC-PRF-01-E	Page 20 of 22
Project Address:		Calculation Date/Time:	22:38, Sun, Aug 11, 2019
Compliance Scope:	NewComplete	Input File Name:	c19-148.cibd16x

NRCC-PRF-LTI-DETAILS -SECTION START-

A. INDOOR CONDITIONED LIGHTING CONTROL CREDITS (Adapted from NRCC-LTI-02-E) — § 140.6

Lighting Control Credits Schedule (includes all lighting controls installed in conditioned space for compliance credit per §140.6(a)2 and Table 140.6-A)				Control Credit Calculation			√ If Acceptance Test Required	Confirmed	
Location in Building	Occupancy Type (must meet requirements of Table 140.6-A)	Type/Description of Lighting Control (i.e., partial on occupancy sensor, manual dimming, etc.)	# of Units	Watts of Controlled Lighting	Power Adjustment Factor	Control Credit Watts		Pass	Fail
5-1-Zone 17	Office (Greater than 250 square feet in floor area)	- none specified -	1		0.00	0		☐	☐
5-1-Zone 17	Office (Greater than 250 square feet in floor area)	- none specified -	1		0.00	0		☐	☐
5-1-Zone 17	Office (Greater than 250 square feet in floor area)	- none specified -	1		0.00	0		☐	☐
5-2-Zone AC 56810	Office (Greater than 250 square feet in floor area)	- none specified -	1		0.00	0		☐	☐
5-2-Zone AC 56810	Office (Greater than 250 square feet in floor area)	- none specified -	1		0.00	0		☐	☐
5-2-Zone AC 56810	Office (Greater than 250 square feet in floor area)	- none specified -	1		0.00	0		☐	☐
5-3-Zone 234	Office (Greater than 250 square feet in floor area)	- none specified -	1		0.00	0		☐	☐
5-3-Zone 234	Office (Greater than 250 square feet in floor area)	- none specified -	1		0.00	0		☐	☐
5-3-Zone 234	Office (Greater than 250 square feet in floor area)	- none specified -	1		0.00	0		☐	☐
5-5-IT ROOM Zone	Office (Greater than 250 square feet in floor area)	- none specified -	1		0.00	0		☐	☐

B. INDOOR CONDITIONED LIGHTING MANDATORY LIGHTING CONTROLS (Adapted from NRCC-LTI-02-E) — § 130.1

This Section Does Not Apply

§130.1(a) = Manual area controls; §130.1(b)= Multi Level; §130.1(c) = Auto Shut-Off; §130.1(d) = Mandatory Daylight; §130.1(e) = Demand Responsive

Project Name:	SAN JOAQUIN PULMONARY	NRCC-PRF-01-E	Page 21 of 22
Project Address:		Calculation Date/Time:	22:38, Sun, Aug 11, 2019
Compliance Scope:	NewComplete	Input File Name:	c19-148.cibd16x

C. TAILORED METHOD CONDITIONED LIGHTING POWER ALLOWANCE SUMMARY AND CHECKLIST (Adapted from NRCC-LTI-04-E) — § 140.6

General lighting power (see Table D)	0
General lighting power from special function areas (see Table E)	NA
Additional "use it or lose it" (See Table G)	0
Total watts	0

D. GENERAL LIGHTING POWER (Adapted from NRCC-LTI-04-E) — § 140.6-D

This Section Does Not Apply

E. GENERAL LIGHTING FROM SPECIAL FUNCTION AREAS (Adapted from NRCC-LTI-04-E) — § 140.6(c) 3H

Room Number	Primary Function Area	Illuminance Value (LUX)	Room Cavity Ratio (Table G)	Allowed LPD	Floor Area (ft²)	Allowed Watts	Confirmed	
							Pass	Fail
NA	NA	NA	NA	NA	NA	NA	☐	☐

Note: Tailored Method for Special Function Areas is not currently implemented

F. ROOM CAVITY RATIO (Adapted from NRCC-LTI-04-E)

Rectangular Spaces							
Room Number	Task/Activity Description	Room Length (ft)	Room Width (ft)	Room Cavity Height (ft)	RCR	Confirmed	
						Pass	Fail
NA	NA	NA	NA	NA	NA	☐	☐

Non-Rectangular Spaces

This Section Does Not Apply

Note: All applicable spaces are listed under the Non-Rectangular Spaces table

G. ADDITIONAL "USE IT OR LOSE IT" (Adapted from NRCC-LTI-04-E)

1.	2.	3.	4.	Allowed Watts	Confirmed	
Wall Display	Combined Floor Display and Task Lighting	Combined Ornamental and Special Effects Lighting	Very Valuable Merchandise		Pass	Fail
0	0	0	0	**0**	☐	☐

Project Name:	SAN JOAQUIN PULMONARY	NRCC-PRF-01-E	Page 22 of 22
Project Address:		Calculation Date/Time:	22:38, Sun, Aug 11, 2019
Compliance Scope:	NewComplete	Input File Name:	c19-148.cibd16x

5. Wall Display

This Section Does Not Apply

6. Floor Display and Task Lighting

This Section Does Not Apply

7. Combined Ornamental and Special Effects Lighting

This Section Does Not Apply

8. Very Valuable Merchandise

This Section Does Not Apply

H. INDOOR & OUTDOOR LIGHTING ACCEPTANCE TESTS & FORMS (Adapted from NRCC-LTI-01-E and NRCC-LTO-01-E) — § 130.4

Declaration of Required Acceptance Certificates (NRCA) –Acceptance Certificates that must be verified in the field. (Retain copies and verify forms are completed and signed to post in field for Field Inspector to verify).

Test Description		Indoor			Outdoor	Confirmed	
		NRCA-LTI-02-A	NRCA-LTI-03-A	NRCA-LTI-04-A	NRCA-LTO-02-A	Pass	Fail
Equipment Requiring Testing or Verification	# of units	Occ Sensors / Auto Time Switch	Auto-Daylight	Demand Responsive	Outdoor Controls		
Occupant Sensors	1	☒	☐	☐	☐	☐	☐
Automatic Time Switch	1	☒	☐	☐	☐	☐	☐
Automatic Daylighting	1	☐	☒	☐	☐	☐	☐
Demand Responsive	0	☐	☐	☐	☐	☐	☐
Outdoor Controls	0	☐	☐	☐	☐	☐	☐

ENVELOPE MANDATORY MEASURES: NONRESIDENTIAL — ENV-MM

Project Name	Date
SAN JOAQUIN PULMONARY	*8/11/2019*

DESCRIPTION

Building Envelope Measures:

§110.8(a):	Installed insulating material shall have been certified by the manufacturer to comply with the California Quality Standards for insulating material, Title 20 Chapter 4, Article 3.
§110.8(c):	All Insulating Materials shall be installed in compliance with the flame spread rating and smoke density requirements of Sections 2602 and 707 of Title 24, Part 2.
§110.8(g):	Heated slab floors shall be insulated according to the requirements in Table 110.8-A.
§110.7(a):	All Exterior Joints and openings in the building that are observable sources of air leakage shall be caulked, gasketed, weatherstripped or otherwise sealed.
§110.6(a):	Manufactured fenestration products and exterior doors shall have air infiltration rates not exceeding 0.3 cfm/ft.² of window area, 0.3 cfm/ft.² of door area for residential doors, 0.3 cfm/ft.² of door area for nonresidential single doors (swinging and sliding), and 1.0 cfm/ft.² for nonresidential double doors (swinging).
§110.6(a):	Fenestration U-factor shall be rated in accordance with NFRC 100, or the applicable default U-factor.
§110.6(a) :	Fenestration SHGC shall be rated in accordance with NFRC 200, or NFRC 100 for site-built fenestration, or the applicable default SHGC.
§110.6(b):	Site Constructed Doors, Windows and Skylights shall be caulked between the unit and the building, and shall be weatherstripped (except for unframed glass doors and fire doors).
§120.7(a):	The opaque portions of the roof/ceiling that separates conditioned spaces from unconditioned spaces or ambient air shall meet the applicable U-Factor requirements as follows: **Metal Building-** The weighted average U-factor of the roof assembly shall not exceed 0.098. **Wood Framed and Others-** The weighted average U-factor of the roof assembly shall not exceed 0.075.
§120.7(b):	The opaque portions of walls that separate conditioned spaces from unconditioned spaces or ambient air shall meet the applicable U-factor as follows: **Metal Building-** The weighted average U-factor of the wall assembly shall not exceed 0.113. **Metal Framed-** The weighted average U-factor of the wall assembly shall not exceed 0.151. **Light Mass Walls-** A 6 inch or greater Hollow Core Concrete Masonry Unit shall have a U-factor not to exceed 0.440. **Heavy Mass Walls-** An 8 inch or greater Hollow Core Concrete Masonry Unit shall have a U-factor not to exceed 0.690. **Wood Framed and Others-** The weighted average U-factor of the wall assembly shall not exceed 0.110. **Spandrel Panels and Opaque Curtain Wall-** The weighted average U-factor of the spandrel panels and opaque curtain wall assembly shall not exceed 0.280. **Demising Walls-**. The opaque portions of framed demising walls shall meet the requirements of Item A or B below: A. Wood framed walls shall be insulated to meet a U-factor not greater than 0.099. B. Metal Framed walls shall be insulated to meet a U-factor not greater than 0.151.
§120.7(c):	The opaque portions of floors and soffits that separate conditioned spaces from unconditioned spaces or ambient air shall meet the applicable U-Factor requirements as follows: **Raised Mass Floors-** Shall have a minimum of 3 inches of lightweight concrete over a metal deck or the weighted average U-factor of the floor assembly shall not exceed 0.269. **Other Floors-**The weighted average U-factor of the floor assembly shall not exceed 0.071.

Klassen corporation
Architecture Construction
2021 Westwind Drive
Bakersfield, CA 93301
(661) 324-3000
(661) 324-3900 Fax
www.klassencorp.com

The above drawings and specifications and ideas, designs and arrangements represented thereby are and shall remain the property of the architect and no part thereof shall be copied, disclosed to others or used in connection with any work or project other than the specific project for which they have been prepared and developed without the written consent of the architect. Visual contact with these drawings or specifications shall constitute conclusive evidence of acceptance of these restrictions.
Written dimensions on these drawings shall have precedence over scaled dimension. contractors shall verify and shall be responsible for all dimensions and conditions on the job and this office must be notified of any variations from the dimensions and conditions shown by these drawings. Shop details must be submitted to this office for approval before proceeding with fabrication.

TENANT IMPROVEMENTS
SAN JOAQUIN VALLEY PULMONARY
5801 TRUXTUN AVE, BAKERSFIELD CA 933309

DATE	ISSUED FOR	MARK
07/01/19	OWNER SD SUBMITTAL	△
07/31/19	OWNER DD SUBMITTAL	△
08/15/19	OWNER CD SUBMITTAL	△
		△
		△
		△
		△

Project No. : C19-148

TITLE 24

EC-2